AXIS T94V01D Pendant Kit

Installation Guide

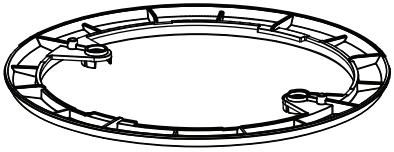

1x

2x

1x

1x

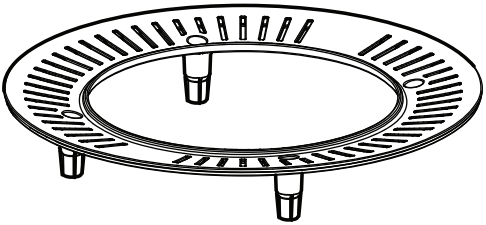

1x

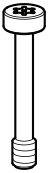

4x

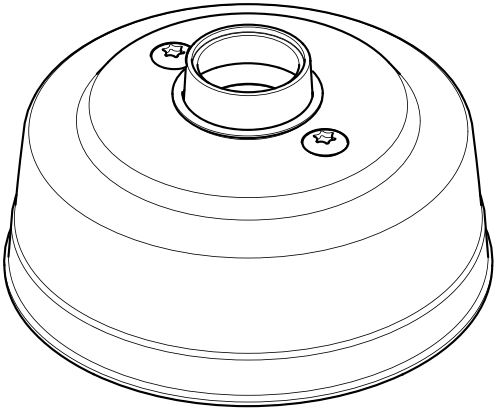

1x

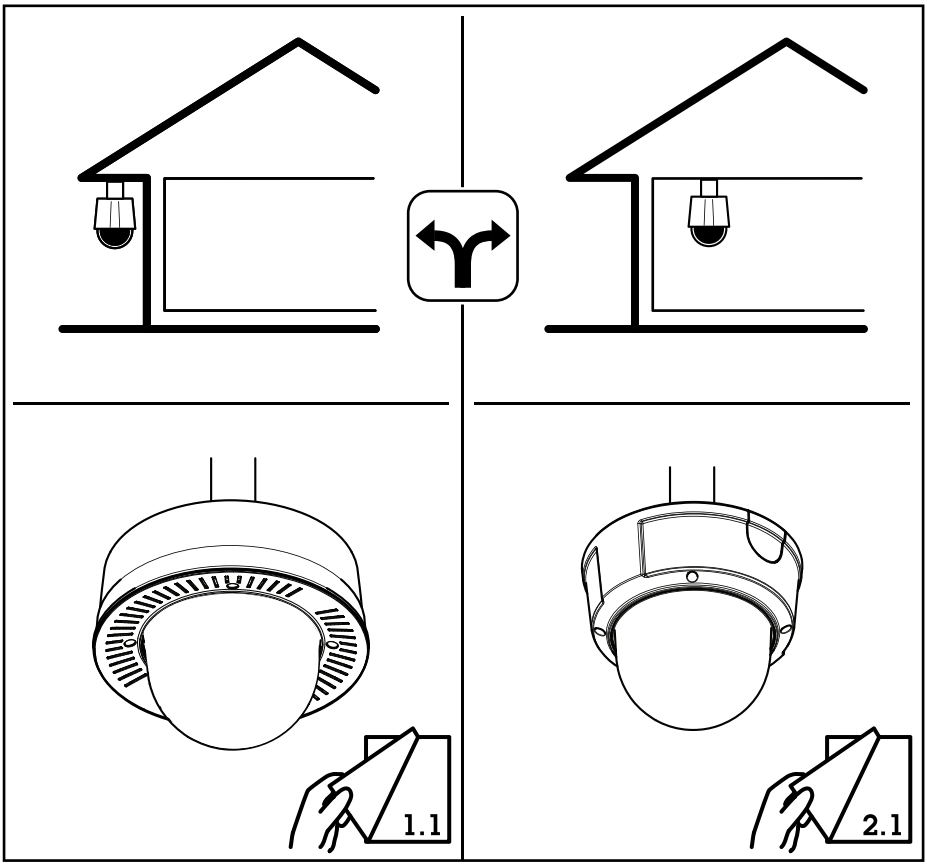
1.1
2.1

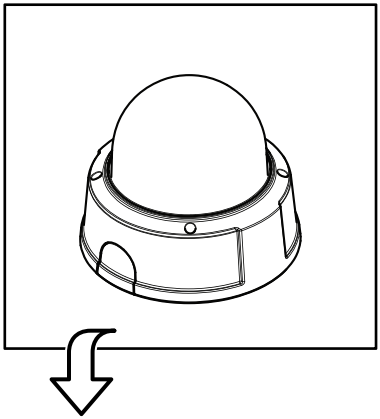

1.1

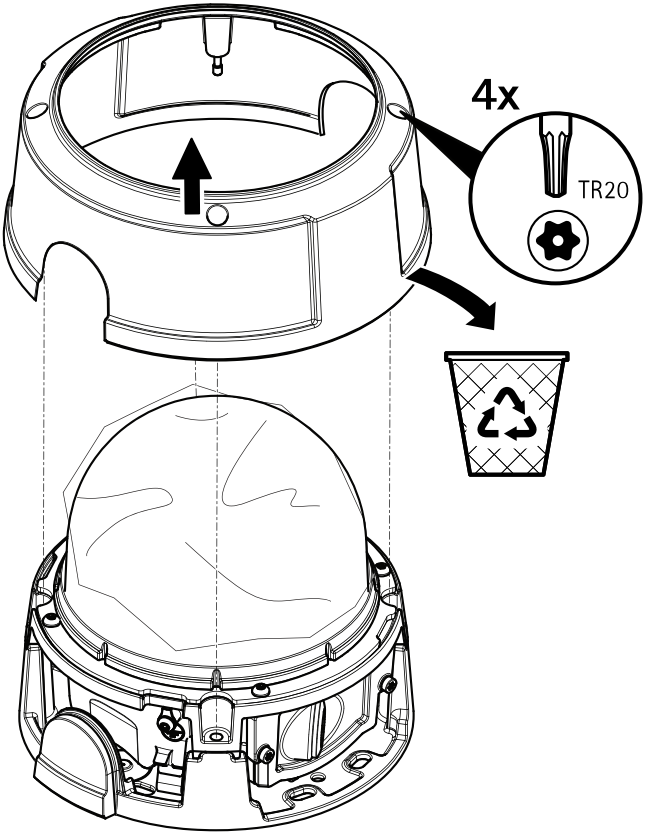

1.2

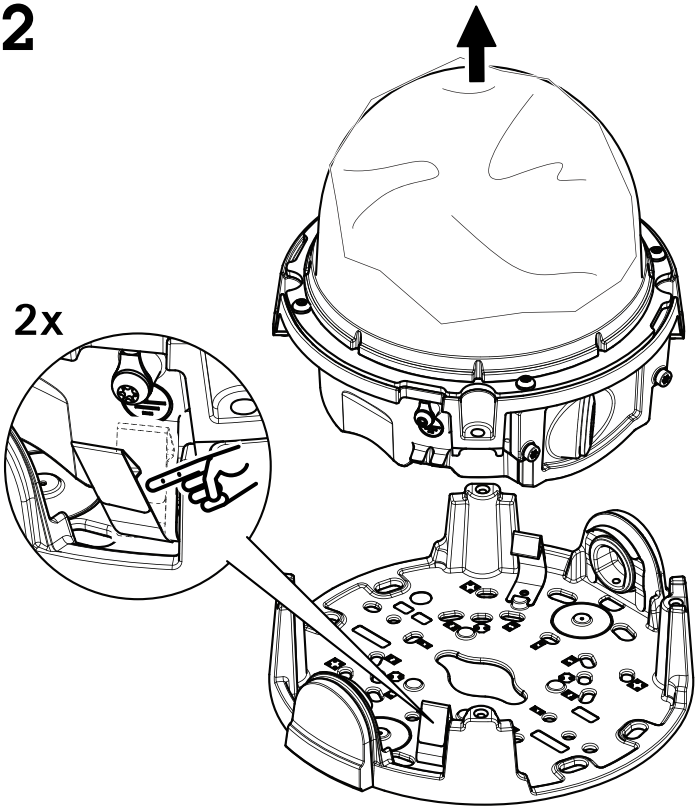

1.3

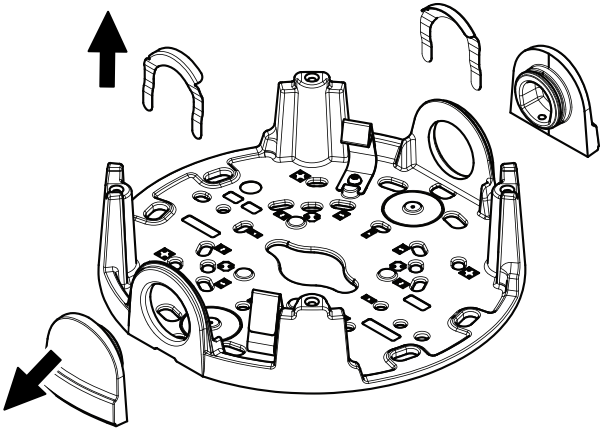

1.4

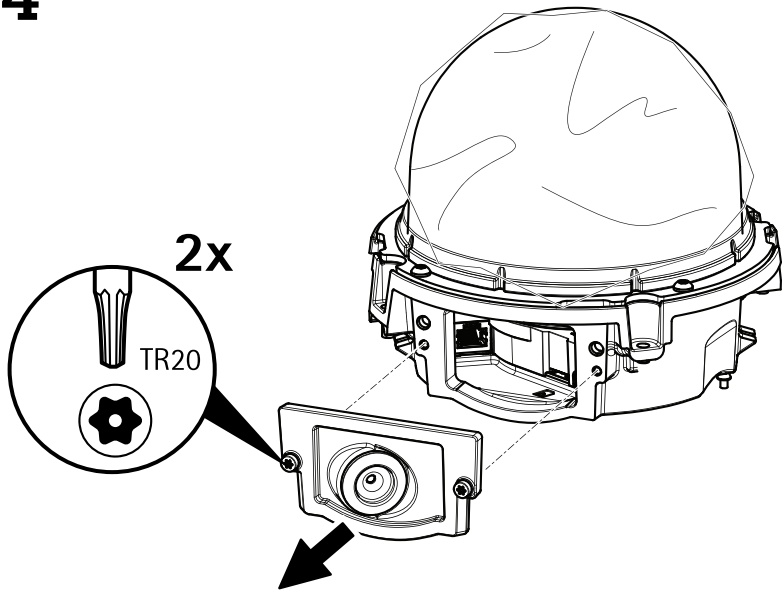

1.5

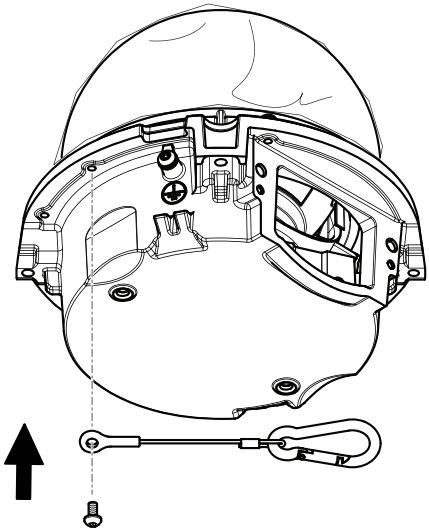

1.6

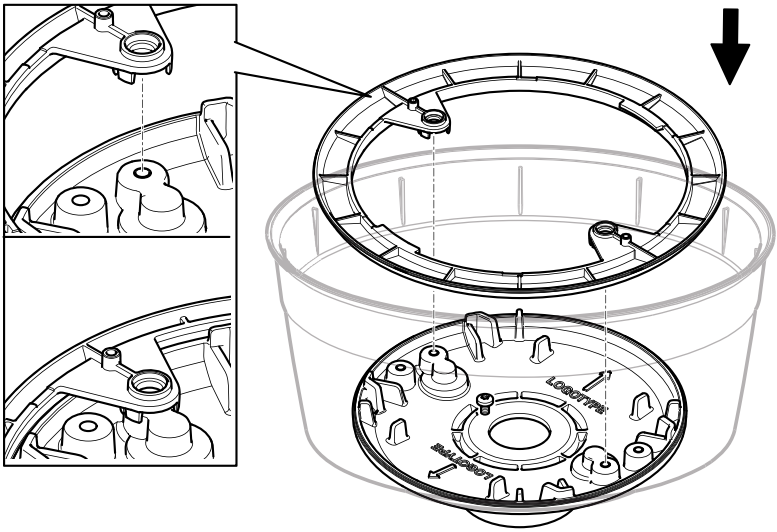

1.7

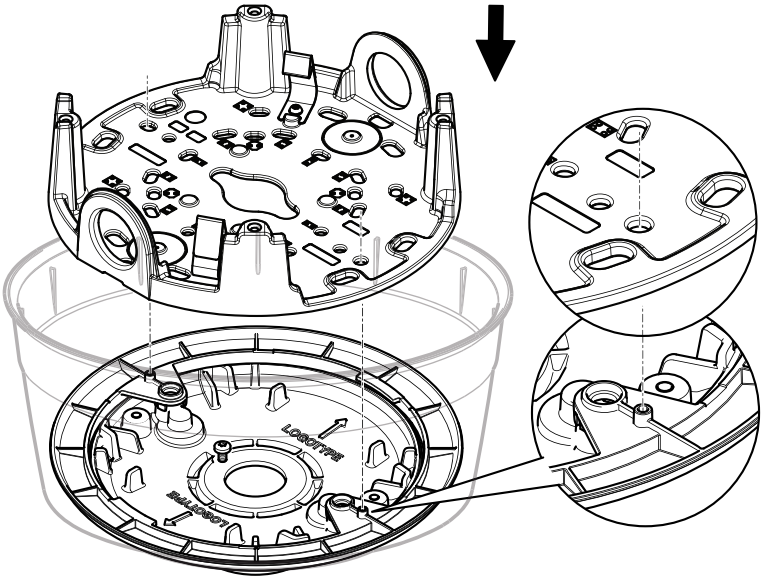

1.8

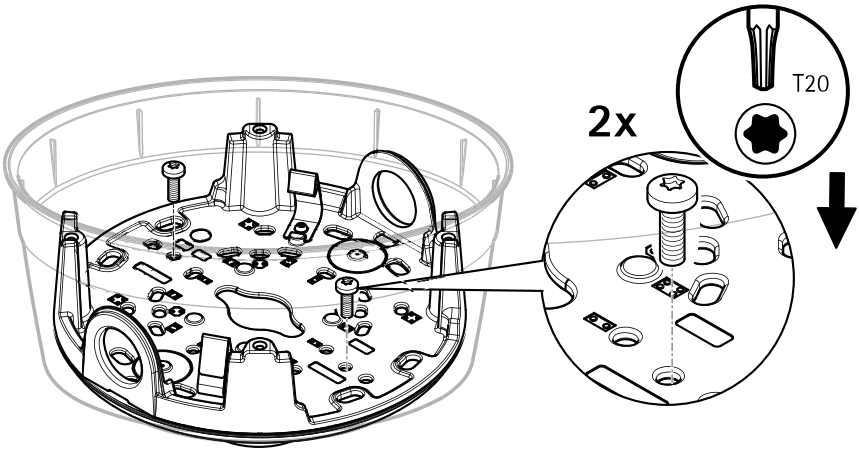

1.9

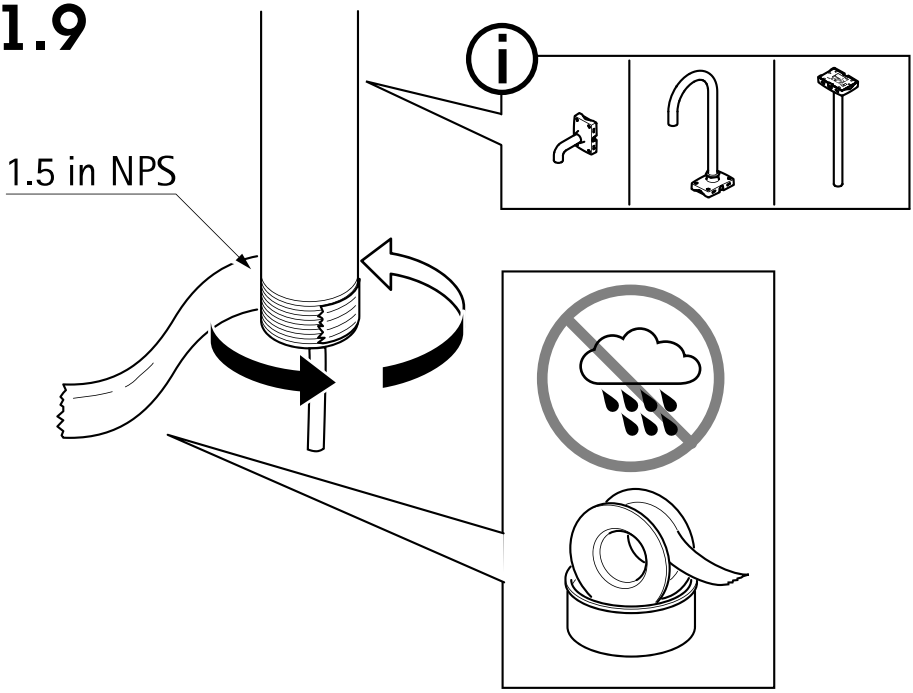

1.10

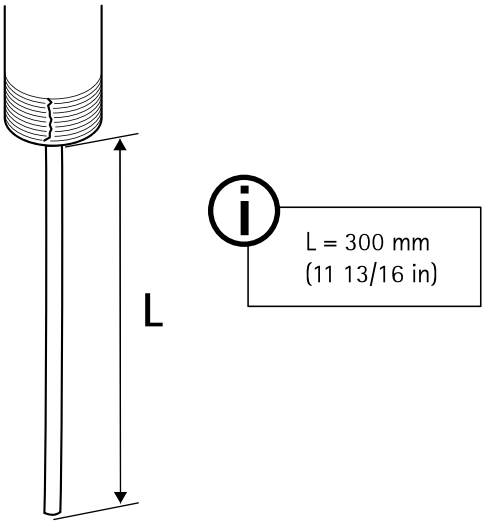

1.11

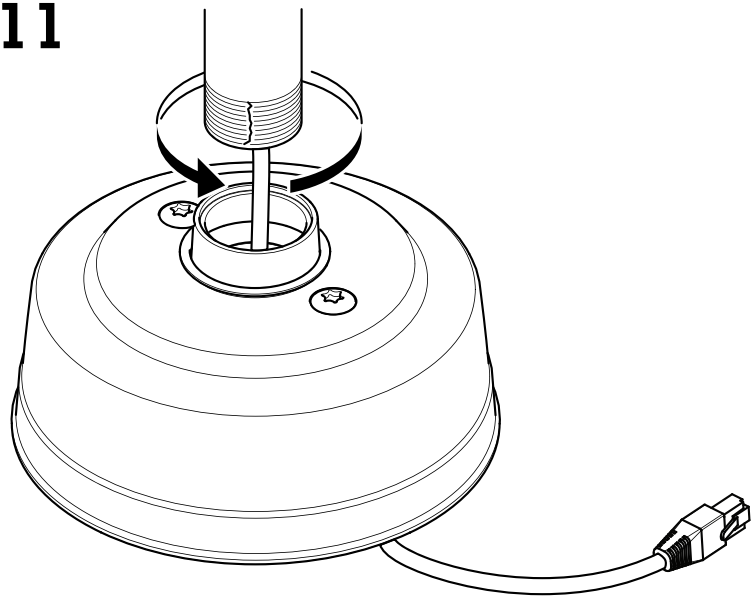

1.12

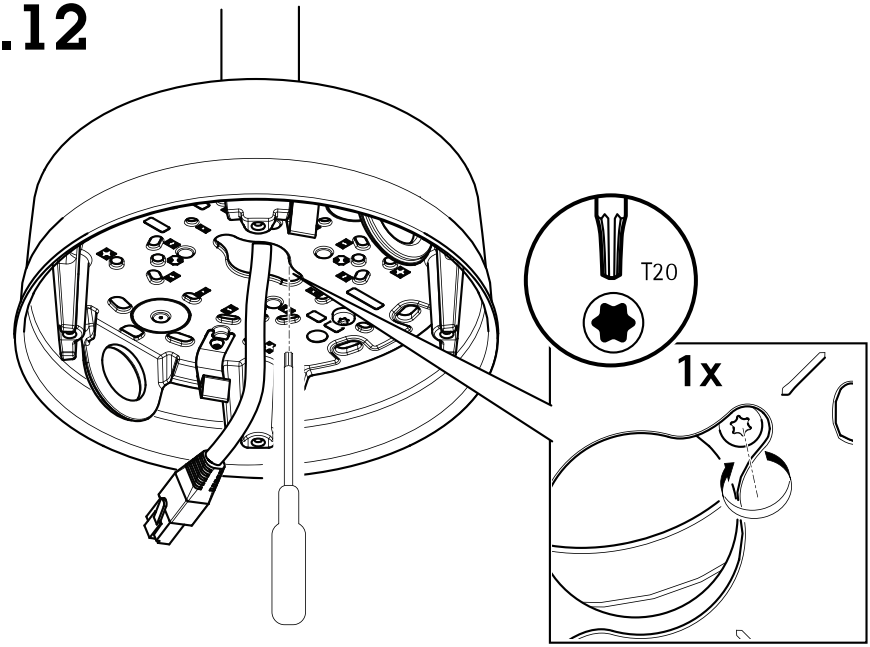

1.13

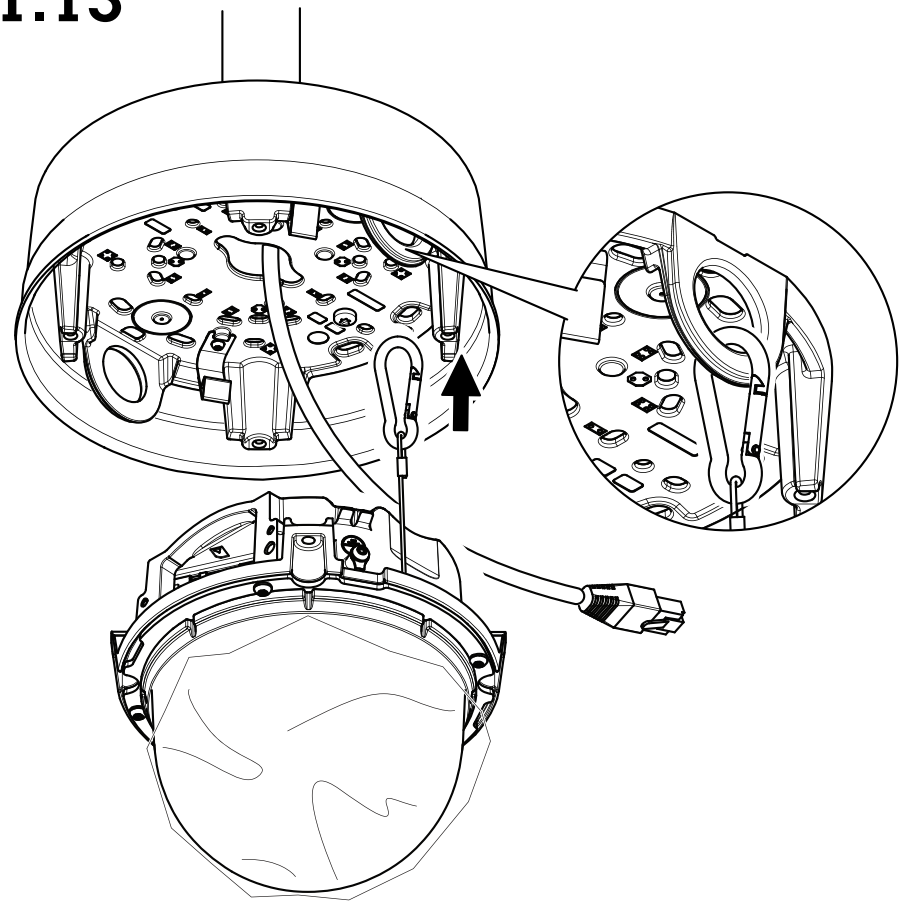

1.14

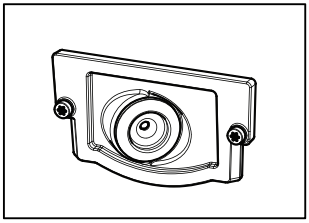

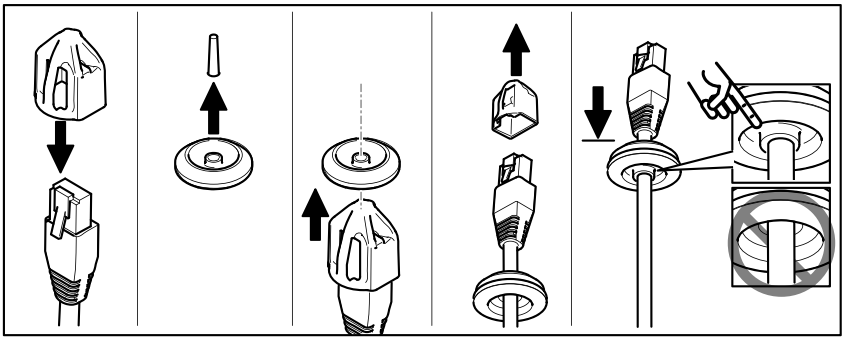

1.15

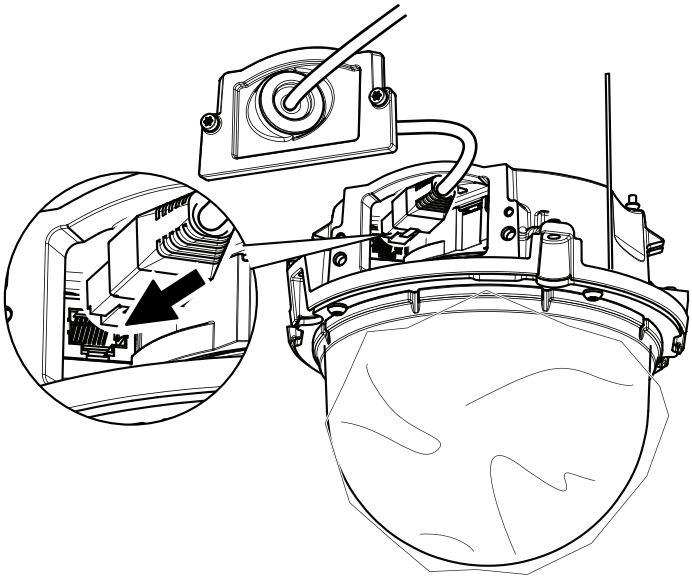

1.16

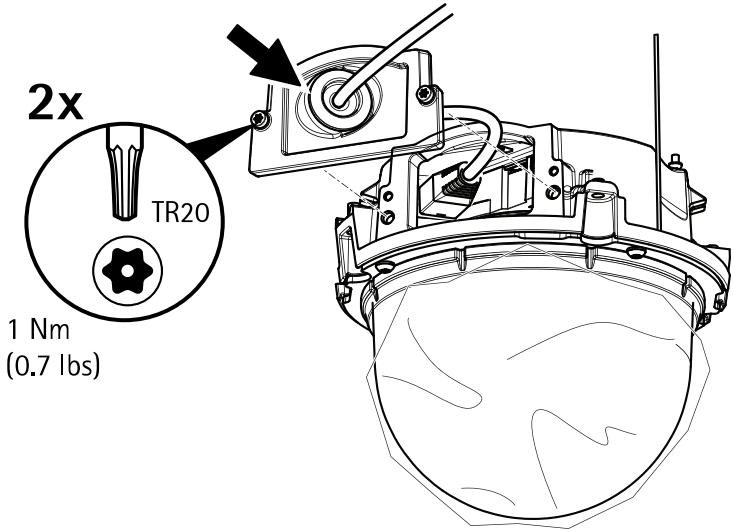

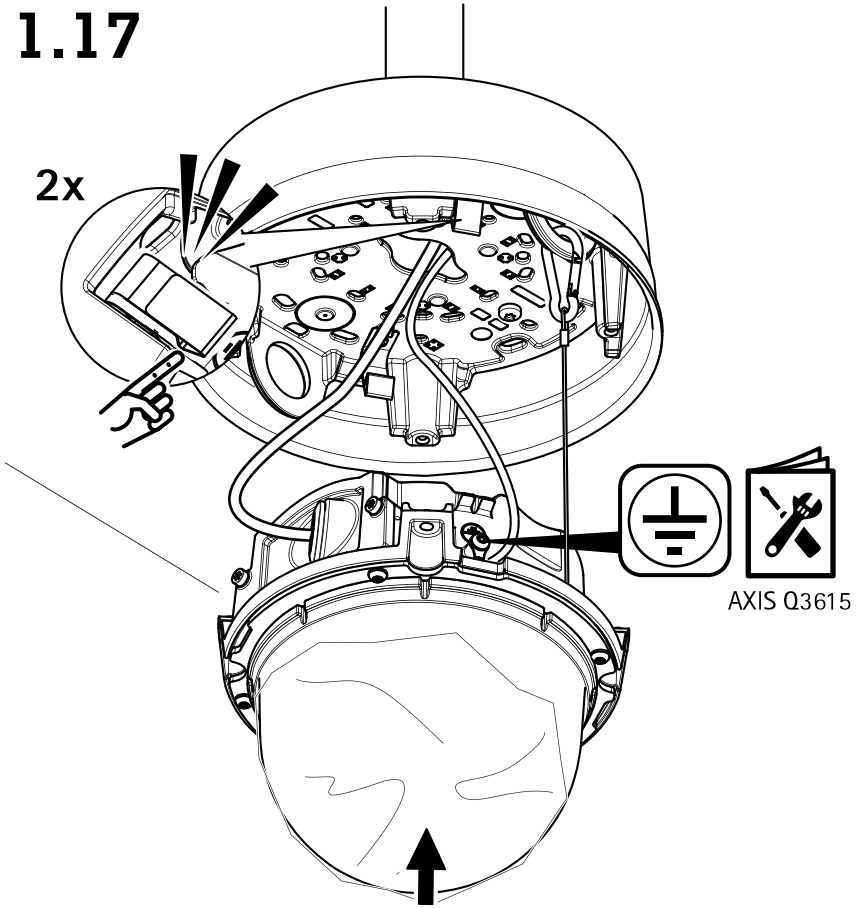
1.17
2x
AXIS Q3615

1.18

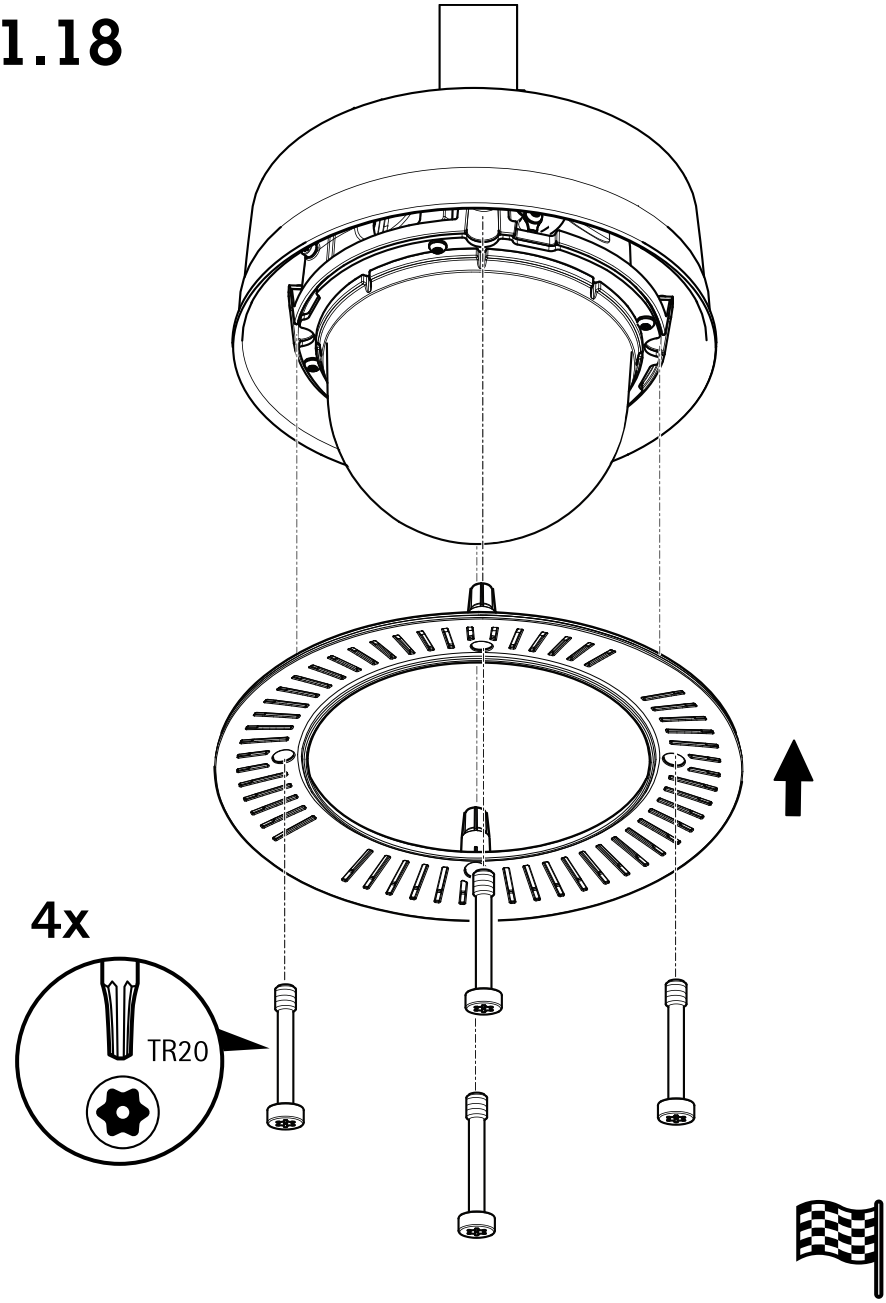

2.1

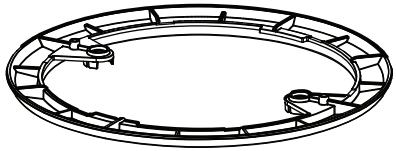

1x

2x

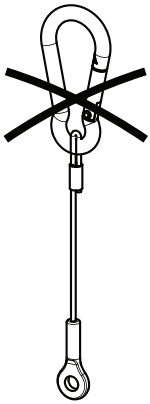

1x

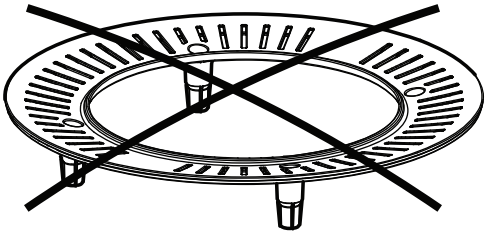

1x

1x

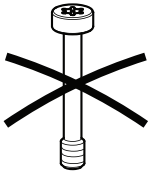

4x

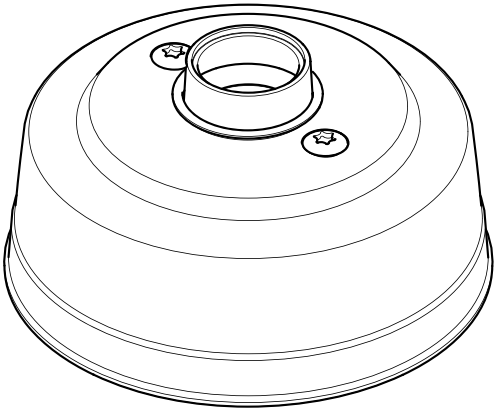

1x

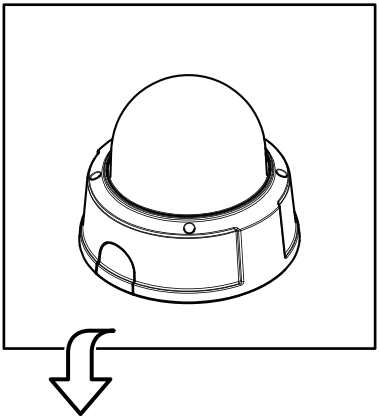

2.2

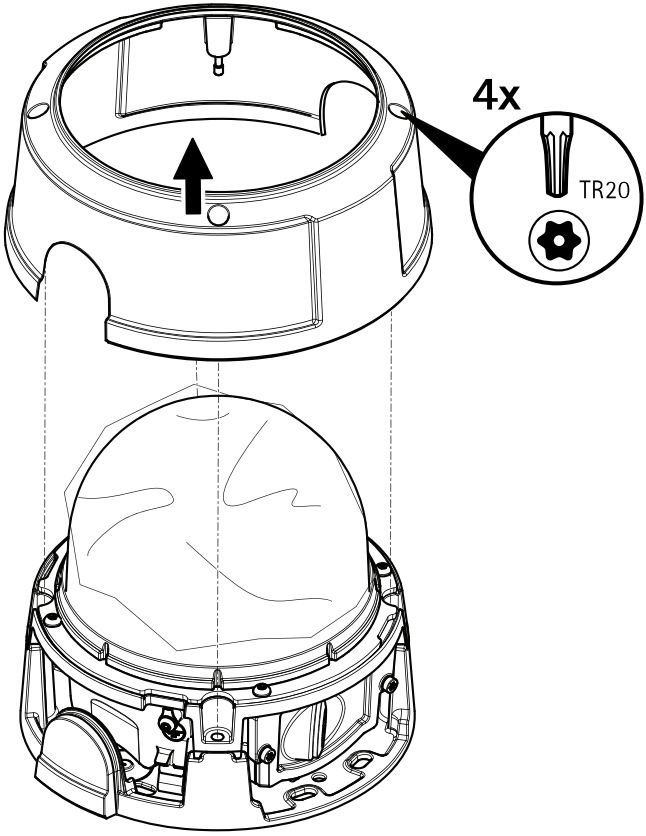

2.3

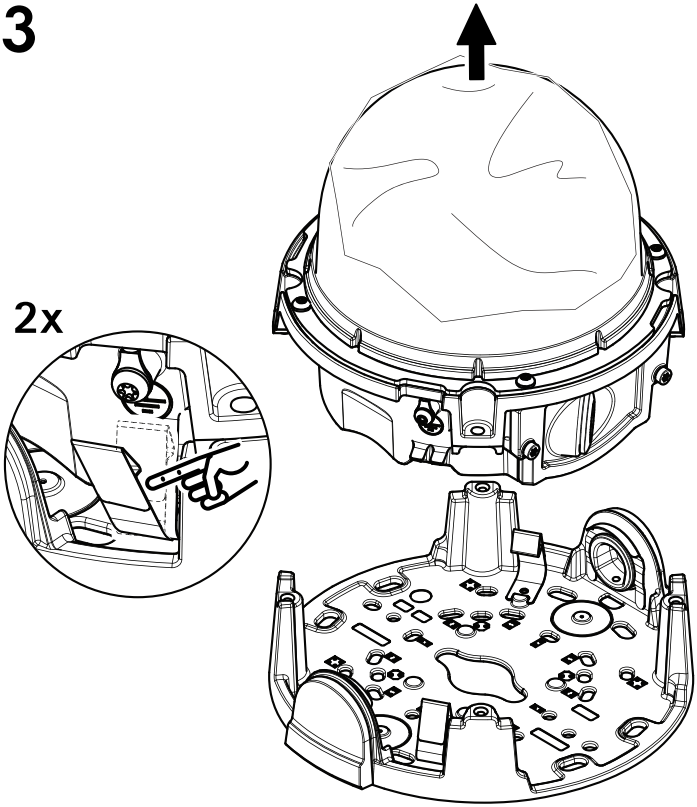

2.4

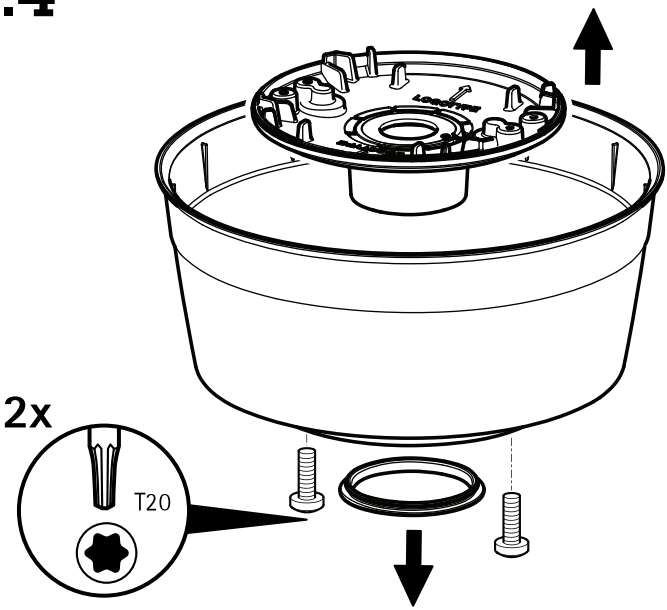

2.5

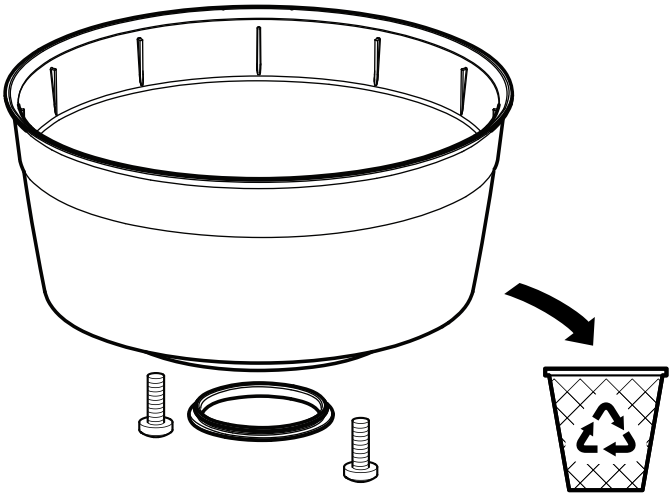

2.6

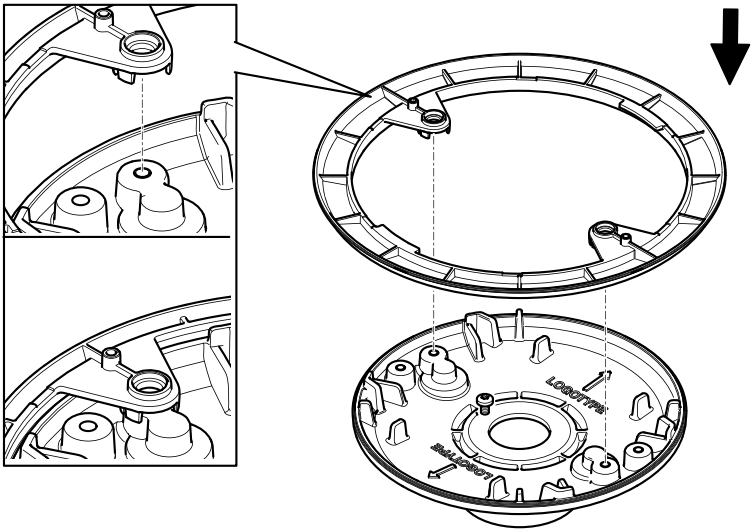

2.7

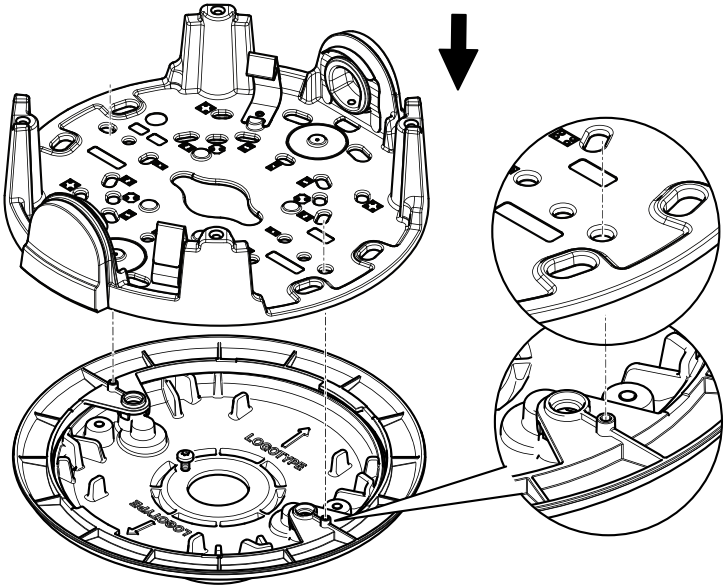

2.8

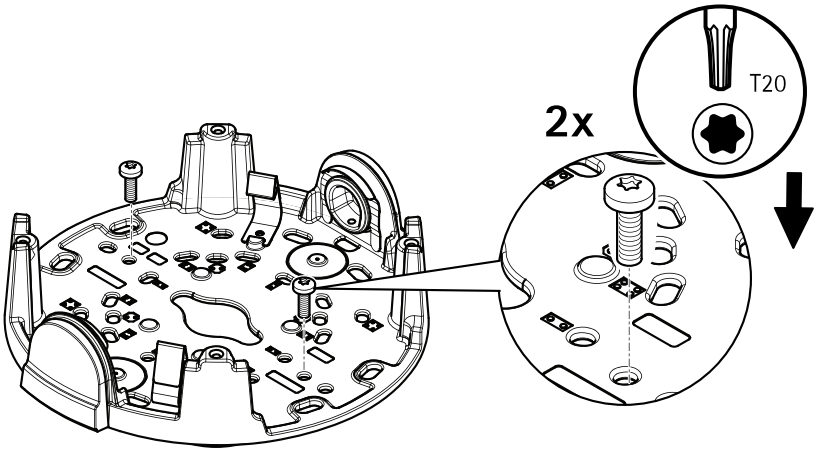

2.9

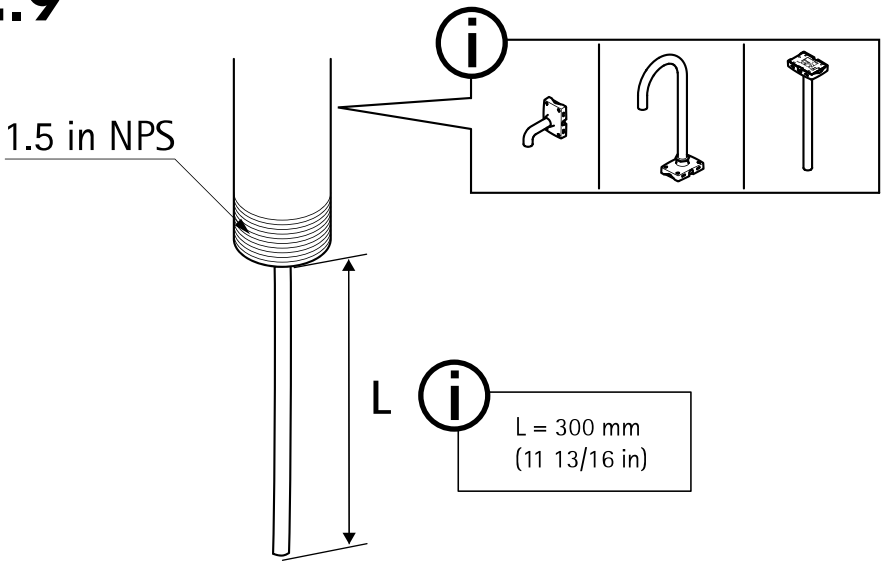

2.10

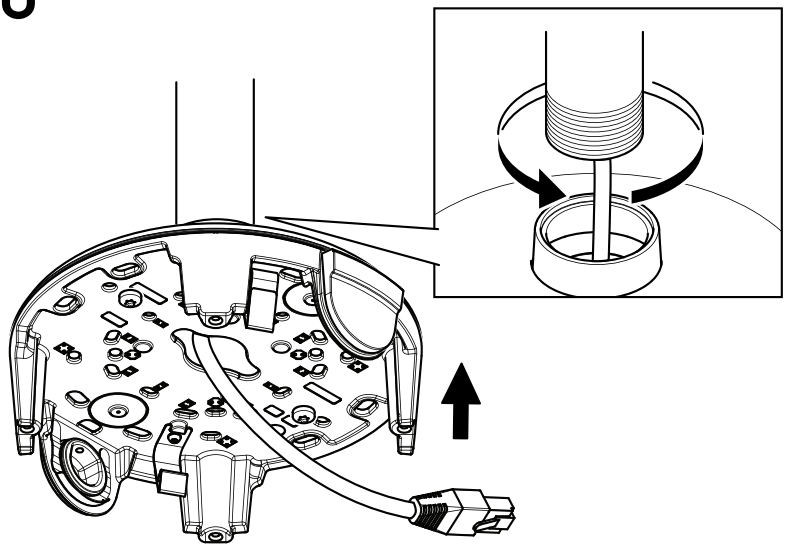

2.11

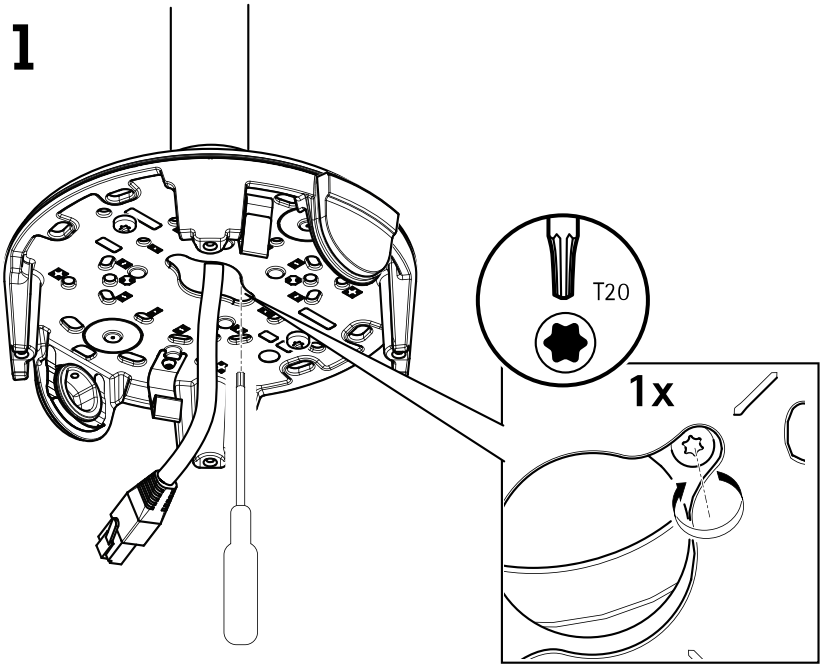

2.12

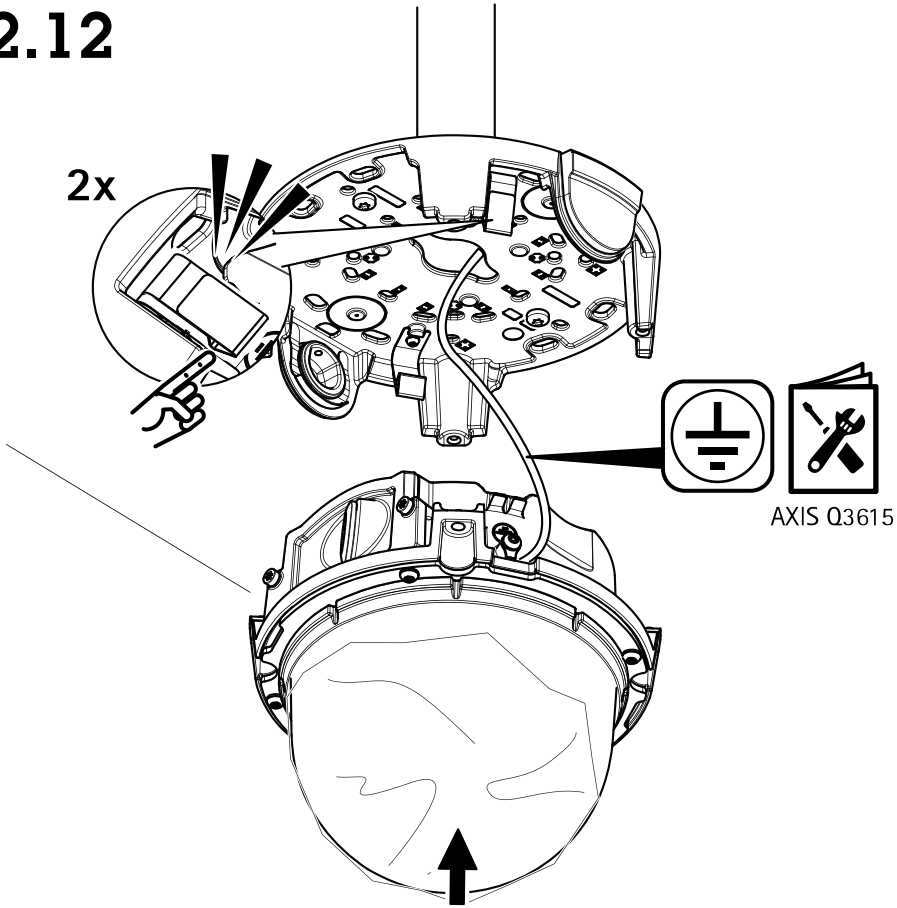

2.13

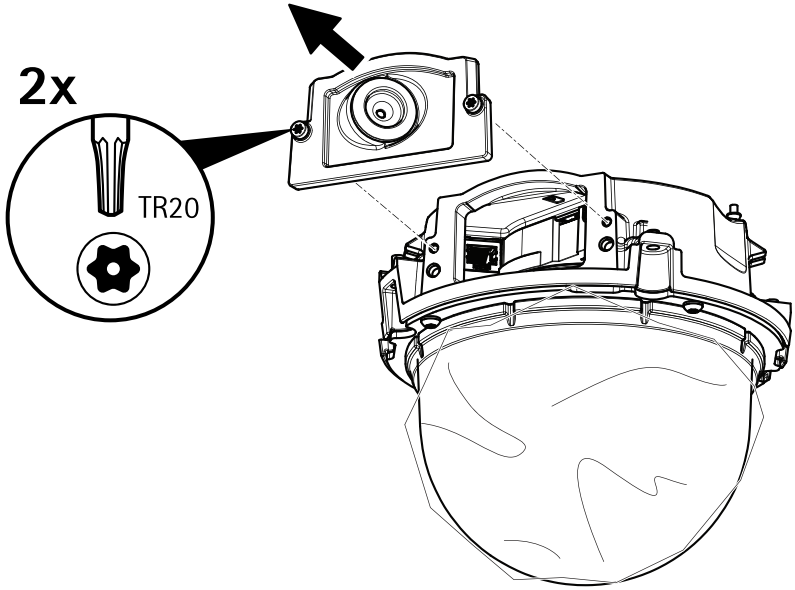

2.14

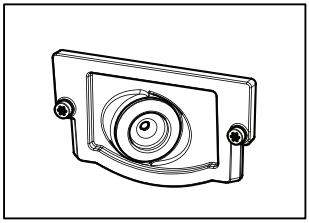

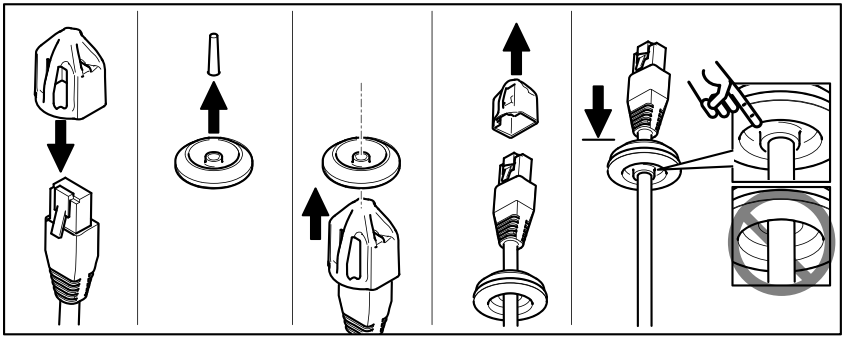

2.15

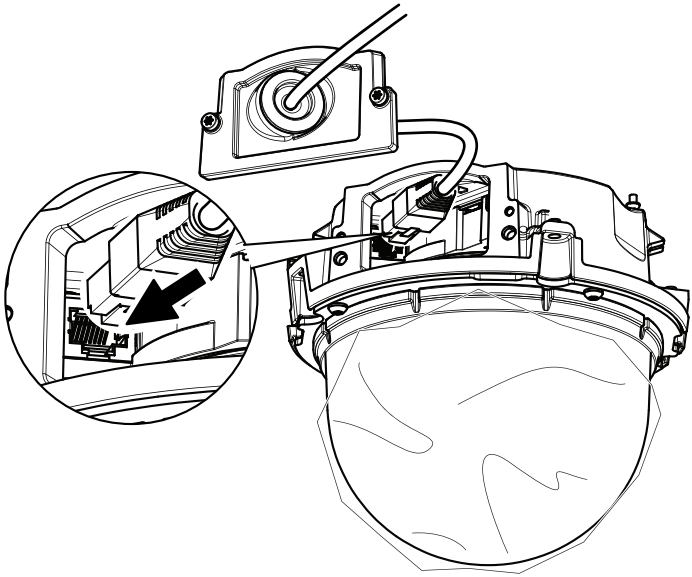

2.16

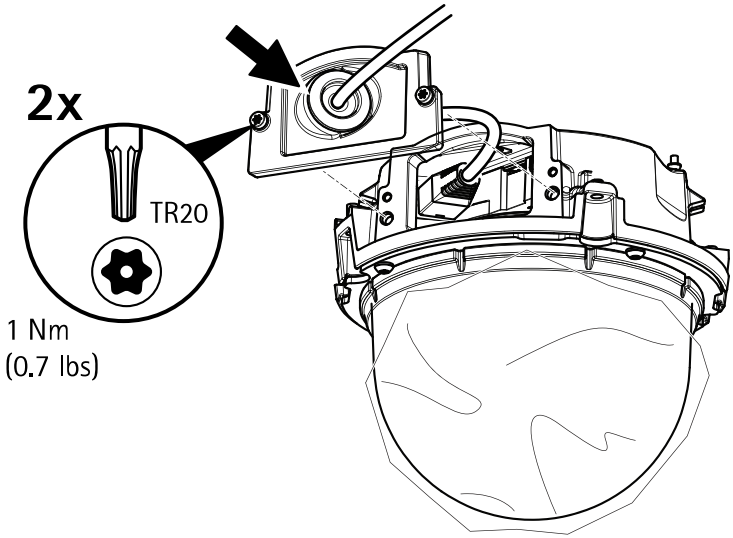

2.17

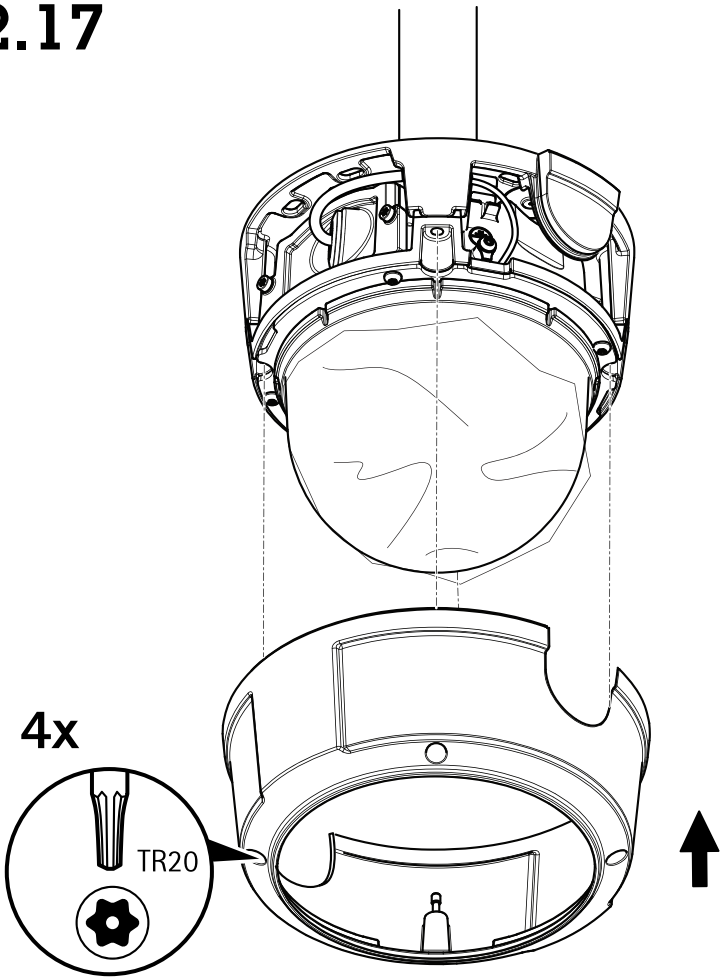

Installation Guide
AXIS T94V01D Pendant Kit
© Axis Communications AB, 2016
Ver. M3.2
Date: October 2016
Part No. 1665815