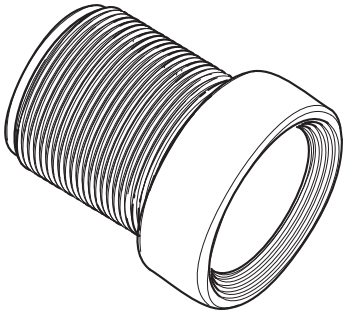

Installation Guide
AXIS Lens M12 6 mm 5P
AXIS Lens M12 16 mm 5P
© Axis Communications AB, 2018
Ver. 2.0
Date: May, 2018
Part No. 1614540

1.1

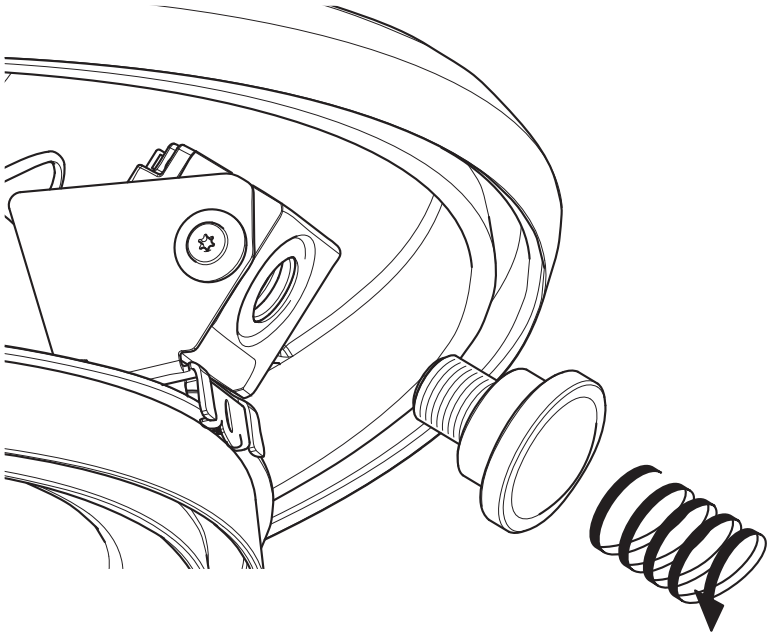

1.2

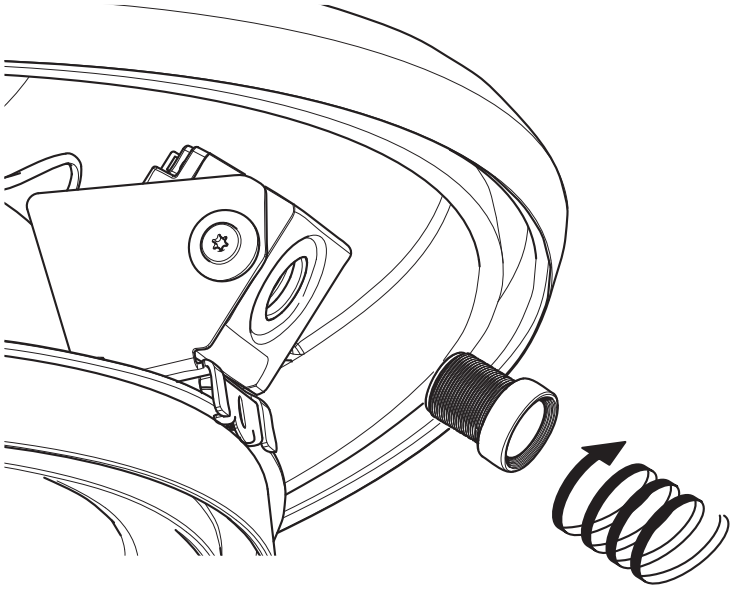

AXIS Lens M12 6 mm 5P
AXIS Lens M12 16 mm 5P

1.3

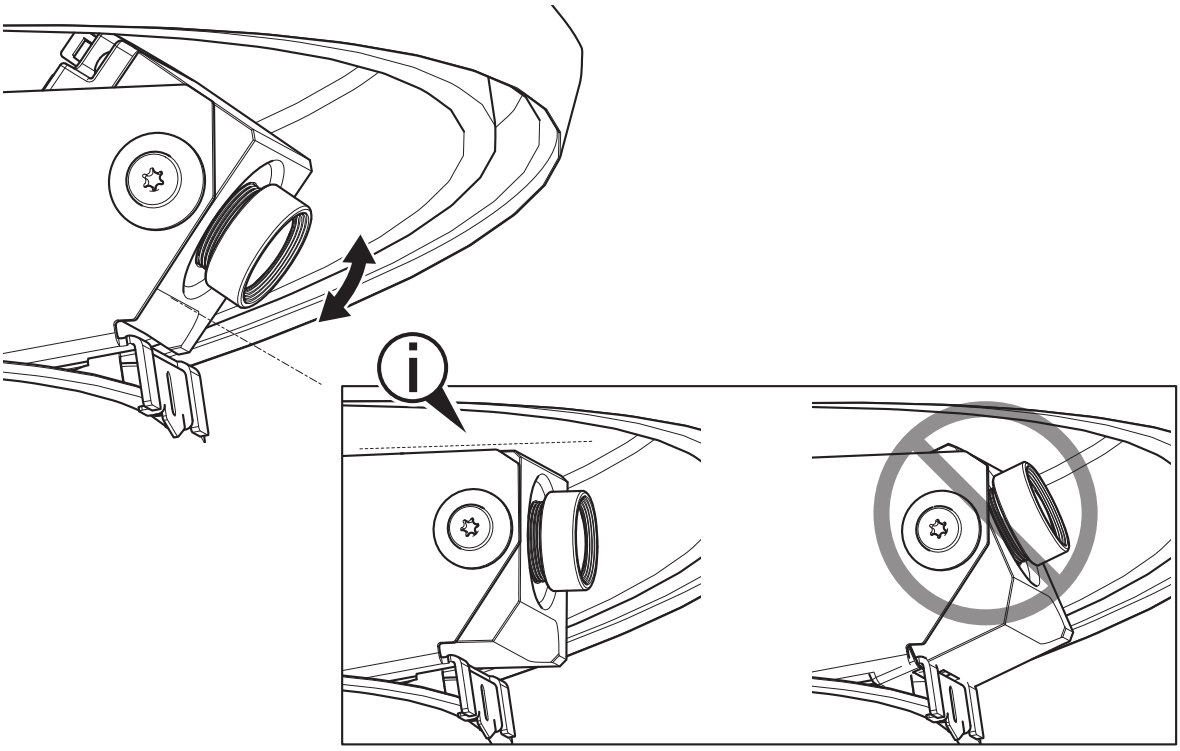

1.4

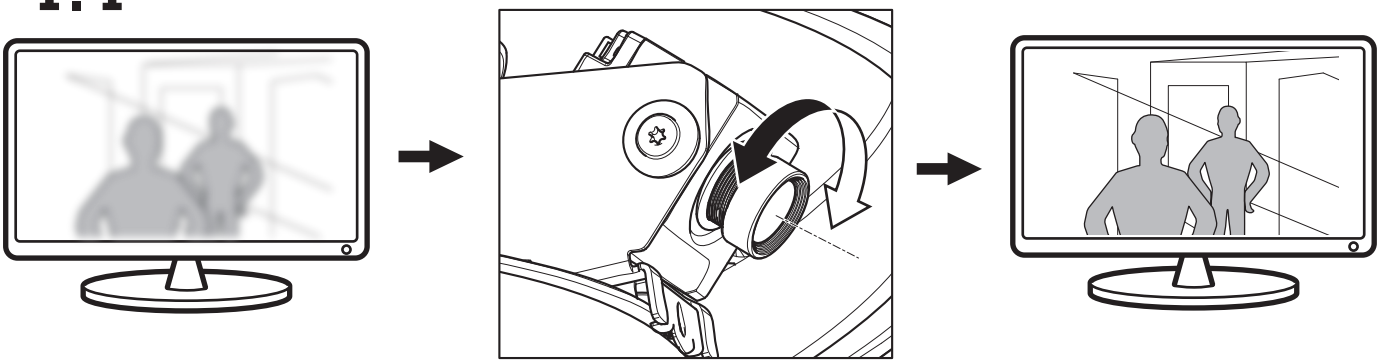

1.5

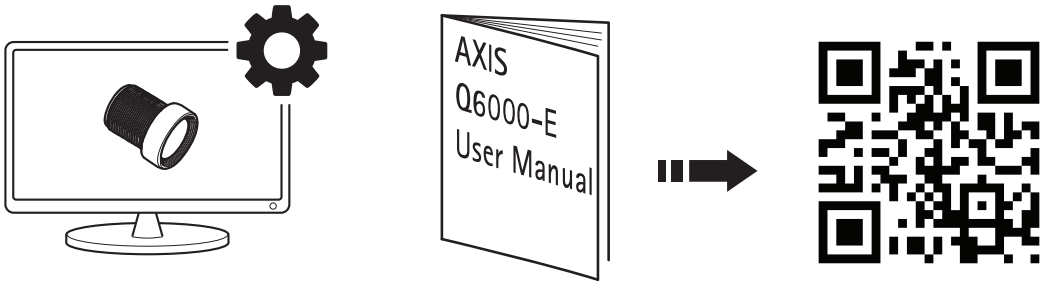

axis.com/products/axis-q6000-e/support-and-documentation