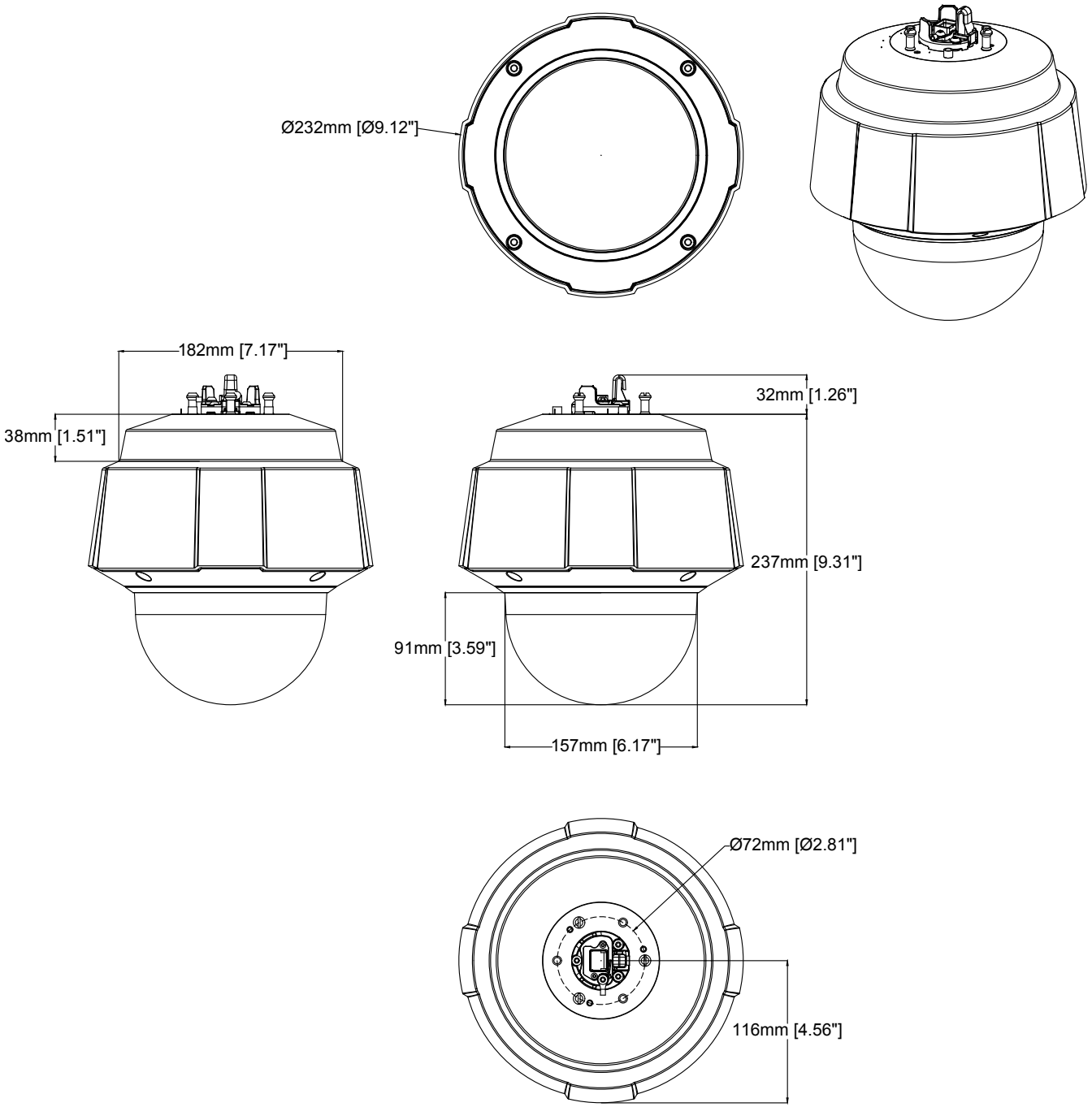

AXIS Q6054-E Mk III PTZ Network Camera

Revision	v.01	Revision date	2018-05-11
Paper size	A4	Release date	2018-05-18
Created by	KAN	Scale	1:5

© 2018 Axis Communications