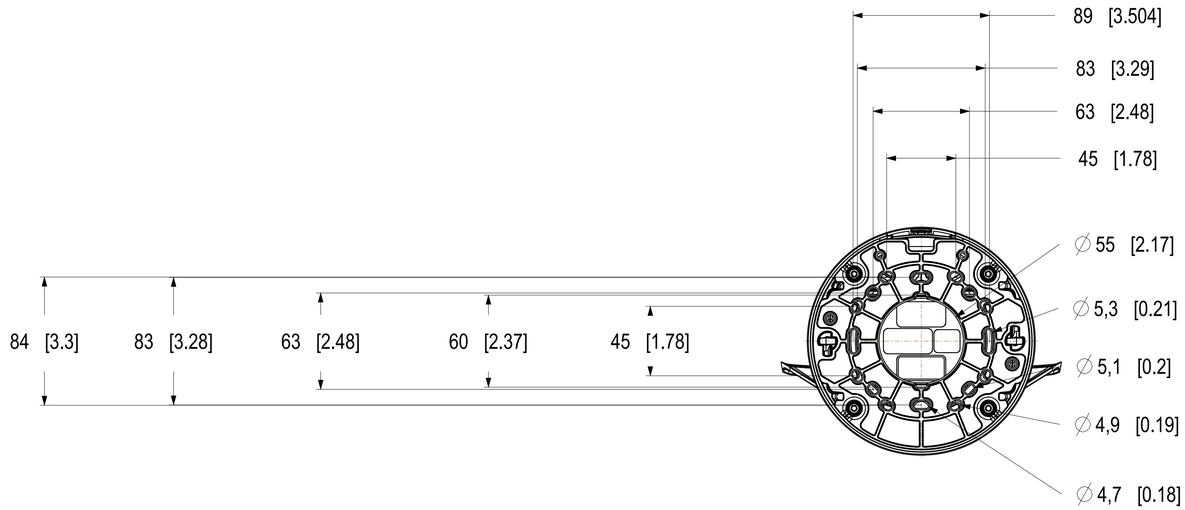

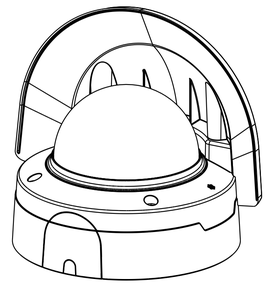

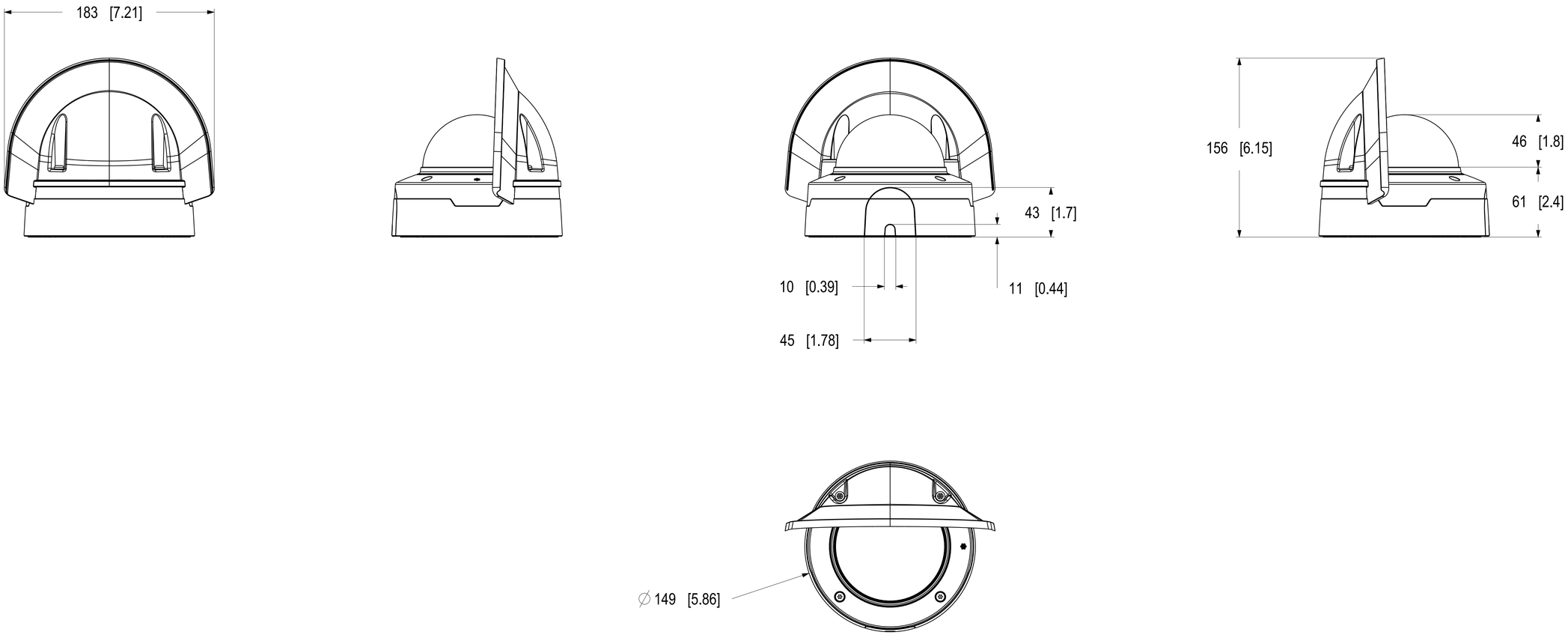

Dimensions in mm [inch]

Date	Version	Scale
2026 Jun-04	M1.2	1:2
Drawing Number	Size	Sheet
3260771	A1	1(1)

P3285-LVE Kit License Plate Verifier

© 2026 Axis Communications AB. All rights reserved.