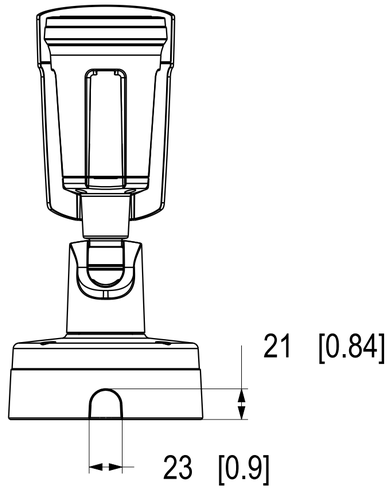

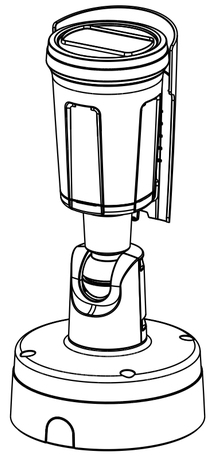

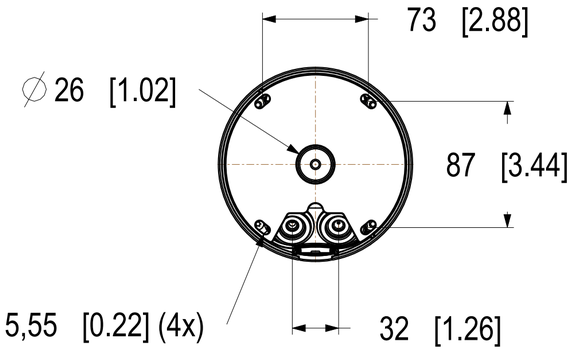

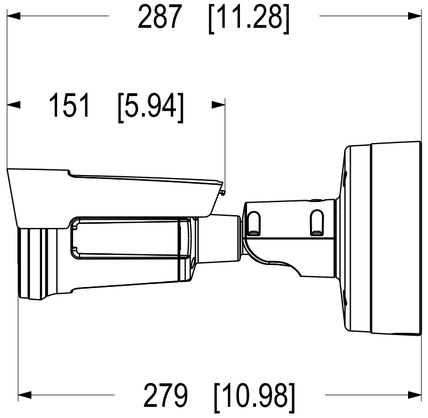

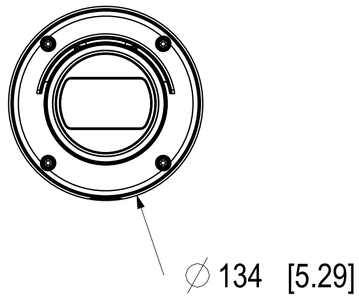

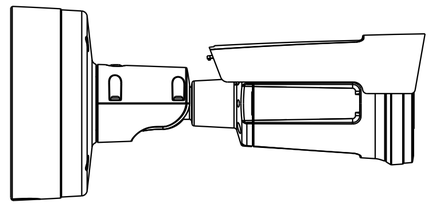

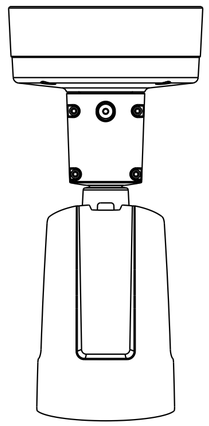

Dimensions in mm [inch]

Date	Version	Scale
2026 Jun-04	M1.1	1:3
Drawing Number	Size	Sheet
3372458	A2	1(2)

AXIS P1486-LE Kit License Plate Verifier

© 2026 Axis Communications AB. All rights reserved.

Weather Shield sliding direction: 15.5mm [6.10]

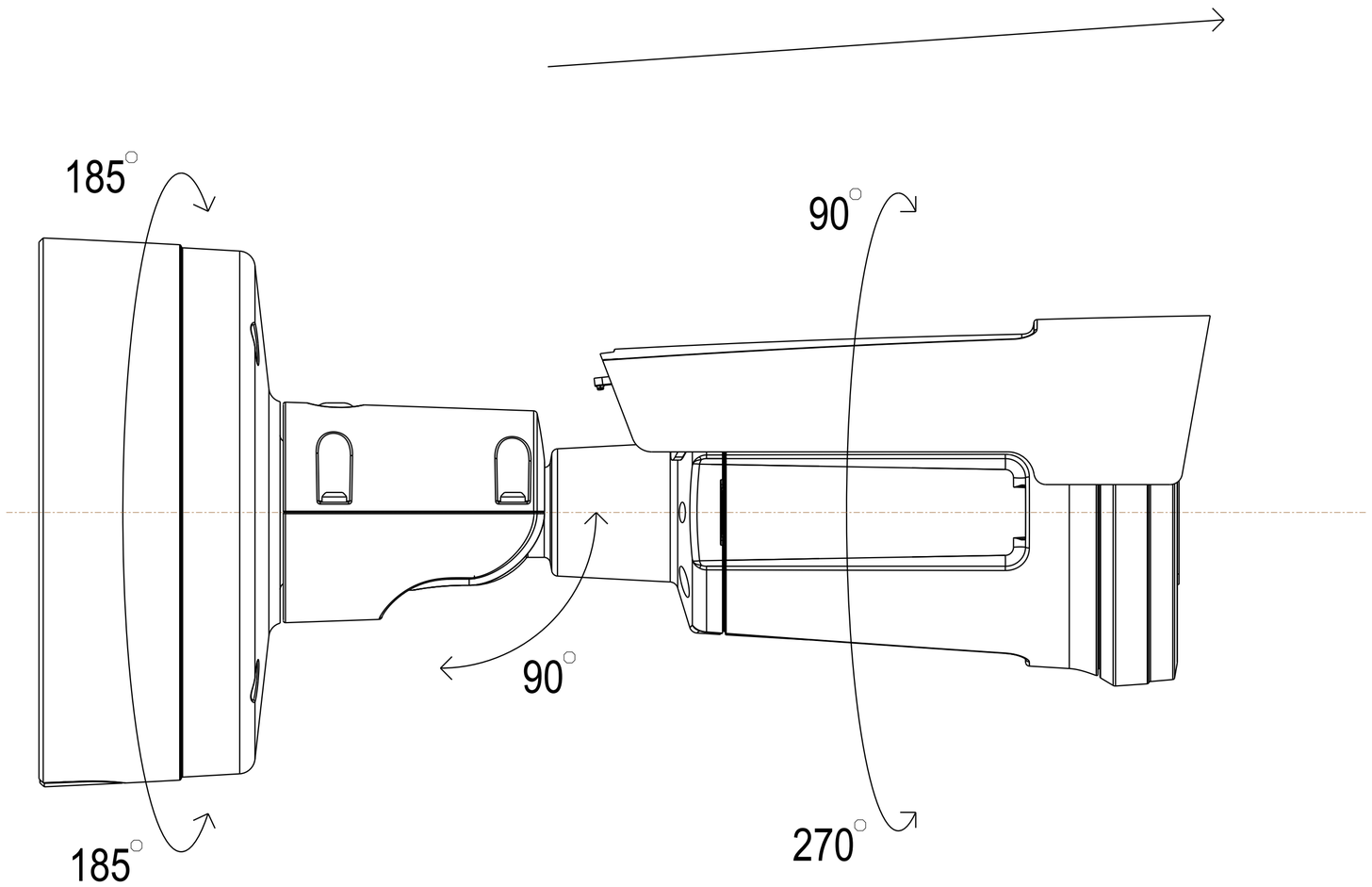

Dimensions in mm [inch]

Date	Version	Scale
2026 Jun-04	M1.1	1:1
Drawing Number	Size	Sheet
3372458	A2	2(2)

AXIS P1486-LE Kit License Plate Verifier

© 2026 Axis Communications AB. All rights reserved.