AXIS M3138-LVE Dome Camera

8 MP AI-powered turret camera

This AI-powered camera offers flexible installation both indoors and outdoors. With a turret-style design, it suppresses light reflections and delivers great 4K image quality and usability. Axis OptimizedIR allows for surveillance in complete darkness. It comes with AXIS Object Analytics preinstalled. And an acoustic sensor with AXIS Audio Analytics. Axis Edge Vault, a hardware-based cybersecurity platform, safeguards the device and offers FIPS 140-3 Level 3 certified secure key storage and operations. Selected markets feature direct installation view in AXIS Installer app. Furthermore, this weatherproof camera comes with a repaintable casing and is IP66-rated with an operating temperature range from -30 °C to 50 °C (-22 °F to 122 °F).

- Great image quality in 8 MP
- Flat-faced design
- Forensic WDR and OptimizedIR
- AI-powered audio and video analytics
- Built-in cybersecurity with Axis Edge Vault

FIPS 140-3 Inside #5139

AXIS M3138-LVE Dome Camera

Camera

Image sensor
1/1.8" progressive scan RGB CMOS
Pixel size 2.0 µm

Lens
Varifocal, 3.7 mm, F2.0
Horizontal field of view: 126°
Vertical field of view: 67°
Minimum focus distance: 0.5 m (1.6 ft)
Fixed iris, IR corrected

Day and night
Automatic IR-cut filter
Hybrid IR filter

Minimum illumination
Color: 0.18 lux at 50 IRE, F2.0
B/W: 0.04 lux at 50 IRE, F2.0
0 lux with IR illumination on

Shutter speed
1/112000 s to 1/2 s

Camera adjustment
Pan ±180°, tilt 0 to +60°, rotation ±95°

System on chip (SoC)

Model
CV75

Memory
2 GB RAM, 8 GB Flash

Compute capabilities
Deep learning processing unit (DLPU)

Video

Video compression
H.264 (MPEG-4 Part 10/AVC) Main and High Profiles
H.265 (MPEG-H Part 2/HEVC) Main Profile
Motion JPEG

Resolution
16:9: 3840x2160 to 640x360
4:3: 1440x1080 to 320x240

Frame rate
Up to 25/30 fps (50/60 Hz) in 4 MP mode
Up to 12.5/15 fps (50/60 Hz) in 8 MP mode

Video streaming
Multiple, individually configurable streams in H.264, H.265 and Motion JPEG
Axis Zipstream technology in H.264 and H.265
Controllable frame rate and bandwidth
VBR/ABR/MBR H.264/H.265

WDR
WDR: Up to 120 dB depending on scene

Multi-view streaming
2 individually cropped out view areas

Image settings
Saturation, contrast, brightness, sharpness, white balance, day/night threshold, local contrast, tone mapping, exposure mode, exposure zones, compression, rotation: 0°, 90°, 180°, 270° including corridor format, mirroring, text and image overlay, dynamic text and image overlay, privacy masks
Scene profiles: forensic, vivid

Image processing
Axis Zipstream, Forensic WDR, Lightfinder 2.0, OptimizedIR

Pan/Tilt/Zoom
Digital PTZ
Preset position tour

Network

Network protocols
IPv4, IPv6 USGv6, ICMPv4/ICMPv6, HTTP, HTTPS[1], HTTP/2, TLS[1], QoS Layer 3 DiffServ, FTP, SFTP, CIFS/SMB, SMTP, mDNS (Bonjour), UPnP®, SNMP v1/v2c/v3 (MIB-II), DNS/DNSv6, DDNS, NTP, NTS, PTP, RTSP, RTP, SRTP/RTSPS, TCP, UDP, IGMPv1/v2/v3, RTCP, ICMP, DHCPv4/v6, ARP, SSH, LLDP, CDP, MQTT v3.1.1, Secure syslog (RFC 3164/5424, UDP/TCP/TLS), Link-Local address (ZeroConf)

1. *This product includes software developed by the OpenSSL Project for use in the OpenSSL Toolkit. (openssl.org), and cryptographic software written by Eric Young (eay@cryptsoft.com).*

System integration

Application Programming Interface
Open API for software integration, including VAPIX® and AXIS Camera Application Platform (ACAP); specifications at *axis.com/developer-community*.
One-click cloud connection
ONVIF® Profile G, ONVIF® Profile M, ONVIF® Profile S, and ONVIF® Profile T, specifications at *onvif.org*

Video management systems
Compatible with AXIS Camera Station Edge, AXIS Camera Station Pro, and video management software from Axis' partners available at *axis.com/vms*.

Onscreen controls
Day/night shift
Wide dynamic range
IR illumination
Privacy masks
Heater

Edge-to-edge
Siren and light pairing

Event conditions
Application
Audio analytics: audio level above threshold, glass break detected, scream detected, shout detected, speech detected, SPL: Above threshold upper, SPL: Below threshold lower
Device status: above/below/within operating temperature, IP address blocked/removed, live stream active, network lost, new IP address, system ready
Edge storage: recording ongoing, storage disruption, storage health issues detected
I/O: manual trigger, virtual input is active
MQTT: MQTT client connected
Scheduled and recurring: schedule
Video: average bitrate degradation, day-night mode, tampering

Event actions
Day-night mode
Illumination: use lights, use lights while the rule is active
LEDs: flash status LED, flash status LED while the rule is active
MQTT: send MQTT publish message
Notification: HTTP, HTTPS, TCP and email
Overlay text
Recordings: record video, record video while the rule is active
Security: erase configuration
SNMP trap messages: send, send while the rule is active
Images or video clips: FTP, SFTP, HTTP, HTTPS, network share and email
WDR mode

Built-in installation aids
Pixel counter, level grid

Analytics

Applications
Included
AXIS Object Analytics, AXIS Image Health Analytics, AXIS Audio Analytics, AXIS Scene Metadata, AXIS Video Motion Detection
Supported
Support for AXIS Camera Application Platform enabling installation of third-party applications, see *axis.com/acap*

AXIS Object Analytics
Object classes: humans, vehicles (types: cars, buses, trucks, bikes, other)
Scenarios: line crossing, object in area, time in area, crossline counting, occupancy in area, tailgating detection, PPE monitoring[BETA], motion in area, motion line crossing
Up to 10 scenarios
Other features: triggered objects visualized with color-coded bounding boxes
Polygon include/exclude areas
Perspective configuration
ONVIF Motion Alarm event

AXIS Image Health Analytics
Detection settings:
Tampering: blocked image, redirected image
Image degradation: blurred image, underexposed image
Other features: sensitivity, validation period

AXIS Audio Analytics
Features: sound pressure level, adaptive audio detection, audio classification
Audio classes: coughing fit, glass break, human presence, scream, shout, speech
Event metadata: audio detections, classifications, sound pressure level

AXIS Scene Metadata
Object classes: humans, faces, vehicles (types: cars, buses, trucks, bikes), license plates
Object attributes: vehicle color, upper/lower clothing color, bag, confidence, position

Approvals

Product markings
UL/cUL, CE, KC, VCCI, RCM, BSMI, NCC, ICES, FCC, TELEC

Supply chain
TAA compliant

EMC
CISPR 35, CISPR 32 Class B, EN 55035,
EN 55032 Class B, EN 61000-6-1, EN 61000-6-2,
EN 61000-6-3
Australia/New Zealand: RCM AS/NZS CISPR 32 Class B
Canada: ICES(B)/NMB(B)
Japan: VCCI Class B
Korea: KS C 9835, KS C 9832 Class B
USA: FCC Part 15 Subpart B Class B

Safety
CAN/CSA C22.2 No. 62368-1 ed. 3,
IEC/EN/UL 62368-1 ed. 3, IEC/EN 62471 risk group exempt, EN: 62311

Environment
IEC 60068-2-1, IEC 60068-2-2, IEC 60068-2-6,
IEC 60068-2-14, IEC 60068-2-27, IEC 60068-2-78,
IEC/EN 60529 IP66, IEC/EN 62262 IK08, NEMA 250 Type 4X

Wireless
EN 62311, EN 300328, EN 301489-1, EN 301489-17,
FCC Part 15 Subpart C, FCC Part 2 Subpart J, MIC, NCC,
RSS-247, RSS-102, RSS-Gen

Network
IPv6 USGv6, NIST SP500-267

Cybersecurity
EN 18031-1, ETSI EN 303 645, BSI IT Security Label,
FIPS 140

Cybersecurity

Edge security
Software: Signed OS, brute force delay protection, digest authentication and OAuth 2.0 RFC6749 Client Credential Flow/OpenID Authorization Code Flow for centralized ADFS account management, password protection, Axis Cryptographic Module (FIPS 140-2 level 1)
Hardware: Axis Edge Vault cybersecurity platform
Secure keystore: secure element (CC EAL 6+, FIPS 140-3 Level 3), system-on-chip security (TEE)
Axis device ID, signed video, secure boot, encrypted filesystem (AES-XTS-Plain64 256bit)

Network security
IEEE 802.1X (EAP-TLS, PEAP-MSCHAPv2)[2],
IEEE 802.1AE (MACsec PSK/EAP-TLS), IEEE 802.1AR,
HTTPS/HSTS[2], TLS v1.2/v1.3[2], Network Time Security (NTS), X.509 Certificate PKI, host-based firewall

Documentation
AXIS OS Hardening Guide
Axis Vulnerability Management Policy
Axis Security Development Model
AXIS OS Software Bill of Material (SBOM)
To download documents, go to *axis.com/support/cybersecurity/resources*
To read more about Axis cybersecurity support, go to *axis.com/cybersecurity*

General

Casing
IP66-, NEMA 4X- and IK08-rated
Polycarbonate hard-coated dome
Plastic casing
Color: white NCS S 1002-B
For repainting instructions, go to the product's support page. For information about the impact on warranty, go to *axis.com/warranty-implication-when-repainting*.

Power
Power over Ethernet (PoE) IEEE 802.3af/802.3at Type 1 Class 3, max 12.95 W, typical (heater off, IR off) 3.57 W
Features: dynamic power mode, low power mode, power meter

2. *This product includes software developed by the OpenSSL Project for use in the OpenSSL Toolkit. (openssl.org), and cryptographic software written by Eric Young (eay@cryptsoft.com).*

Wireless interface
Bluetooth® 5.4 Low Energy
Bluetooth profiles: none
Features: direct installation view through AXIS Installer mobile app

Environmental sensors
Environmental sensors through portcast technology accessories. For more information, see *Optional accessories*.

Connectors
Network: Shielded RJ45 10BASE-T/100BASE-TX/1000BASE-T PoE

Sensor
Acoustic sensor

IR illumination
OptimizedIR with power-efficient, long-life 850 nm IR LEDs
Range of reach 20 m (66 ft) or more depending on the scene

Storage
Support for microSD/microSDHC/microSDXC card
Support for SD card encryption (AES-XTS-Plain64 256bit)
Recording to network-attached storage (NAS)
For SD card and NAS recommendations see *axis.com*

Operating conditions
Temperature: -30° C to 50 °C (-22 °F to 122 °F)
Maximum temperature (intermittent): 65 °C (140 °F)
Humidity: 10–100% RH (non-condensing)

Storage conditions
Temperature: -40 °C to 65 °C (-40 °F to 149 °F)
Humidity: 5–95% RH (non-condensing)

Dimensions
For the overall product dimensions, see the dimension drawing in this datasheet.
Effective Projected Area (EPA): 0.008 m^2 (0.09 ft^2)

Weight
362 g (0.8 lb)

Box content
Camera, installation guide, connector guard, cable gaskets, owner authentication key

System tools
AXIS Site Designer, AXIS Device Manager, AXIS Installer, product selector, accessory selector, lens calculator
Available at *axis.com*

Languages
English, German, French, Spanish, Italian, Russian, Simplified Chinese, Japanese, Korean, Portuguese, Polish, Traditional Chinese, Dutch, Czech, Swedish, Finnish, Turkish, Thai, Vietnamese

Warranty
5-year warranty, see *axis.com/warranty*

Software support
New feature development until 2030 (AXIS OS 12, 13 and 14)
Support until 2035-12-31 (AXIS OS LTS 2030–2035)
Read more about the AXIS OS lifecycle at *help.axis.com/axis-os*

Part numbers
Available at *axis.com/products/axis-m3138-lve#part-numbers*

Optional accessories

Portcast
AXIS D6210 Air Quality Sensor

Installation
AXIS T8415 Wireless Installation Tool

Mounting
AXIS TM3218 Recessed Mount
AXIS TM3401 Grid Ceiling Mount
AXIS T94B01P Conduit Back Box

Storage
AXIS Surveillance Cards

For more accessories, go to *axis.com/products/axis-m3138-lve#compatible-products*

Sustainability

Substance control
PVC free, BFR/CFR free in accordance with JEDEC/ECA Standard JS709
RoHS in accordance with EU RoHS Directive 2011/65/EU and 2015/863, and standard EN IEC 63000:2018
REACH in accordance with (EC) No 1907/2006. For SCIP UUID, see *echa.europa.eu*

Materials

Renewable carbon-based plastic content: 48%
(recycled: 1%, bio-based: 47%)
Screened for conflict minerals in accordance with OECD guidelines
To read more about sustainability at Axis, go to *axis.com/about-axis/sustainability*

Environmental responsibility

axis.com/environmental-responsibility
Axis Communications is a signatory of the UN Global Compact, read more at *unglobalcompact.org*

Detect, Observe, Recognize, Identify (DORI)

	DORI definition	Distance
Detect	25 px/m (8 px/ft)	70 m (230 ft)
Observe	63 px/m (19 px/ft)	28 m (92 ft)
Recognize	125 px/m (38 px/ft)	14 m (46 ft)
Identify	250 px/m (76 px/ft)	7 m (20 ft)

The DORI values are calculated using pixel densities for different use cases as recommended by the EN-62676-4 standard. The calculations use the center of the image as the reference point and consider lens distortion. The possibility to recognize or identify a person or object depends on factors such as object motion, video compression, lighting conditions, and camera focus. Use margins when planning. The pixel density varies across the image, and the calculated values can differ from the distances in the real world.

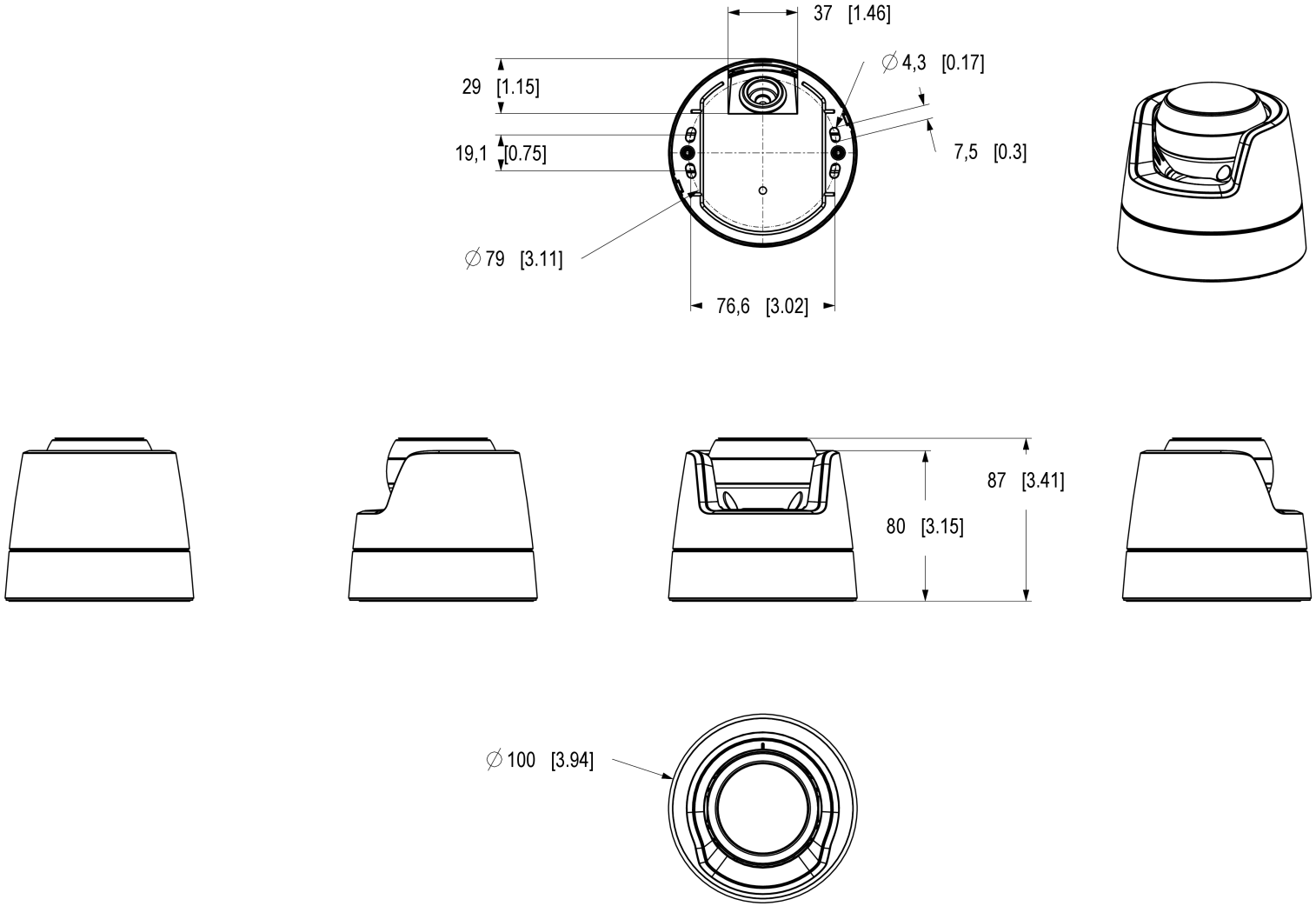

Dimensions in mm [inch]

Date	Version	Scale
2026 Apr-23	M1.5	1:2
Drawing Number	Size	Sheet
3581320	A3	1(2)

AXIS COMMUNICATIONS

AXIS M3138-LVE Dome Camera

© 2026 Axis Communications AB. All rights reserved.

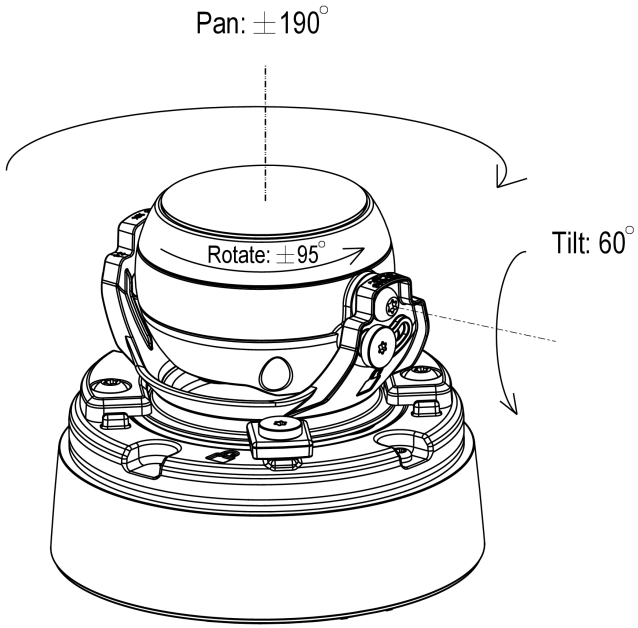

AXIS COMMUNICATIONS

AXIS M3138-LVE Dome Camera

Dimensions in mm [inch]

Date	Version	Scale
2026 Apr-23	M1.5	1:2
Drawing Number	Size	Sheet
3581320	A3	2(2)

© 2026 Axis Communications AB. All rights reserved.

Highlighted capabilities

AXIS Audio Analytics

AXIS Audio Analytics uses adaptive audio detection to generate alarms on sudden increases in sound volume. With AI-based classifiers, it can detect screaming and shouting. You can also get extra confirmation by combining AXIS Audio Analytics with video analytics. This smart application only transmits metadata, ensuring privacy is safeguarded. A core feature of AXIS OS, AXIS Audio Analytics comes preinstalled at no extra cost.

Axis Edge Vault

Axis Edge Vault is the hardware-based cybersecurity platform that safeguards the Axis device. It forms the foundation that all secure operations depend on and offer features to protect the device's identity, safeguard its integrity and protect sensitive information from unauthorized access. For instance, **secure boot** ensures that a device can boot only with **signed OS**, which prevents physical supply chain tampering. With signed OS, the device is also able to validate new device software before accepting to install it. And the **secure keystore** is the critical building-block for protecting cryptographic information used for secure communication (IEEE 802.1X, HTTPS, Axis device ID, access control keys etc.) against malicious extraction in the event of a security breach. The secure keystore and secure connections are provided through a Common Criteria or FIPS 140 certified hardware-based cryptographic computing module.

Furthermore, signed video ensures that video evidence can be verified as untampered. Each camera uses its unique video signing key, which is securely stored in the secure keystore, to add a signature into the video stream allowing video to be traced back to the Axis camera from where it originated.

To read more about Axis Edge Vault, go to *axis. com/ solutions/edge-vault*.

AXIS Object Analytics

AXIS Object Analytics is a preinstalled, multifeatured video analytics that detects and classifies humans, vehicles, and types of vehicles. Thanks to AI-based algorithms and behavioral conditions, it analyzes the scene and their spatial behavior within – all tailored to your specific needs. Scalable and edge-based, it requires minimum effort to set up and supports various scenarios running simultaneously.

Lightfinder

The Axis Lightfinder technology delivers high-resolution, full-color video with a minimum of motion blur even in near darkness. Because it strips away noise, Lightfinder makes dark areas in a scene visible and captures details in very low light. Cameras with Lightfinder discern color in low light better than the human eye. In surveillance, color may be the critical factor to identify a person, an object, or a vehicle.

OptimizedIR

Axis OptimizedIR provides a unique and powerful combination of camera intelligence and sophisticated LED technology, resulting in our most advanced camera-integrated IR solutions for complete darkness. In our pan-tilt-zoom (PTZ) cameras with OptimizedIR, the IR beam automatically adapts and becomes wider or narrower as the camera zooms in and out to make sure that the entire field of view is always evenly illuminated.

Direct installation view

Direct installation view is a camera feature that enables fast setup using Bluetooth® technology to view the camera stream in real time during the installation phase.

© 2026 Axis Communications AB. AXIS COMMUNICATIONS, AXIS, ARTPEC and VAPIX are registered trademarks of Axis AB in various jurisdictions. All other trademarks are the property of their respective owners. We reserve the right to introduce modifications without notice.