AXIS P3407-VE Dome Camera

Outdoor 5 MP AI-powered PTRZ dome

This outdoor-ready dome camera offers excellent 5 MP image quality. Remote PTRZ (pan-tilt-roll-zoom) functionality allows for hassle-free installation. And with PoE out, it can be used to power another device. Built on ARTPEC-9, this AI-powered camera can run powerful analytics on the edge and comes with AXIS Object Analytics and AXIS Audio Analytics preinstalled. What's more, this robust IP66-, IK10-, and NEMA 4X-rated outdoor-ready camera has an operating temperature range from -40°C to 50 °C (-40°F to 122°F). In addition, Axis Edge Vault safeguards the device and offers FIPS 140-3 Level 3 certified secure key storage and operations.

- Excellent image quality in 5 MP
- PTRZ for easy installation
- PoE out to power an additional device
- AI-powered audio and video analytics
- Built-in cybersecurity with Axis Edge Vault

FIPS 140-3 Inside #5139

AXIS P3407-VE Dome Camera

Camera

Image sensor
1/2.8" progressive scan RGB CMOS
Pixel size 2.0 µm

Lens
Varifocal, 3.0–8.5 mm, F1.38–2.58
Horizontal field of view: 104°-34°
Vertical field of view: 76°-26°
Minimum focus distance: 1.0 m (3.3 ft)
P-Iris control, IR corrected

Day and night
Automatic IR-cut filter

Minimum illumination
Color: 0.1 lux at 50 IRE, F1.38
B/W: 0.03 lux at 50 IRE, F1.38

Shutter speed
1/30500 s to 2 s

Camera adjustment
Pan ±180°, tilt -40 to +75°, rotation ±95°

System on chip (SoC)

Model
ARTPEC-9

Memory
2 GB RAM, 8 GB Flash

Compute capabilities
Deep learning processing unit (DLPU)

Video

Video compression
H.264 (MPEG-4 Part 10/AVC) Baseline, Main and High Profiles
H.265 (MPEG-H Part 2/HEVC) Main Profile
AV1
Motion JPEG

Resolution
16:9: 2560x1440
16:10: 1920x1200
4:3: 2592x1944

Frame rate
Up to 25/30 fps (50/60 Hz) in all resolutions

Video streaming
Up to 20 unique and configurable video streams[1]
Axis Zipstream technology in H.264, H.265 and AV1
ABR H.264/H.265/AV1
Low latency mode
Video streaming indicator

Signal-to-noise ratio
>55 dB

WDR
Forensic WDR: Up to 120 dB depending on scene

Multi-view streaming
Up to 7 individually cropped out view areas

Noise reduction
Spatial filter (2D noise reduction)
Temporal filter (3D noise reduction)

Image settings
Saturation, contrast, brightness, sharpness, white balance, day/night threshold, local contrast, tone mapping, exposure mode, exposure zones, defog, barrel distortion correction, rotation: 0°, 90°, 180°, 270° including corridor format, mirroring, dynamic text and image overlay, overlay widget, privacy masks, target aperture, electronic image stabilization

Image processing
Forensic WDR, Lightfinder 2.0

Pan/Tilt/Zoom
Digital PTZ with preset positions
PTRZ preset positions

1. *We recommend a maximum of 3 unique video streams per camera or channel, for optimized user experience, network bandwidth, and storage utilization. A unique video stream can be served to many video clients in the network using multicast or unicast transport method via built-in stream reuse functionality.*

Network

Network protocols
IPv6 USGv6, HTTP, HTTPS[2], TLS[2], QoS Layer 3 DiffServ, FTP, SFTP, CIFS/SMB, SMTP, mDNS (Bonjour), UPnP®, SNMP v1/v2c/v3 (MIB-II), DNS/DNSv6, DDNS, NTP, NTS, PTP, RTSP, RTP, SRTP/RTSPS, TCP, UDP, IGMPv1/v2/v3, RTCP, ICMP, DHCPv4/v6, ARP, SSH, LLDP, CDP, MQTT v3.1.1, Secure syslog (RFC 3164/5424, UDP/TCP/TLS), Link-Local address (ZeroConf)

System integration

Application Programming Interface
Open API for software integration, including VAPIX® and AXIS Camera Application Platform (ACAP); specifications at *axis.com/developer-community*.
One-click cloud connection
ONVIF® Profile G, ONVIF® Profile M, ONVIF® Profile S, and ONVIF® Profile T, specifications at *onvif.org*

Video management systems
Compatible with AXIS Camera Station Edge, AXIS Camera Station Pro, and video management software from Axis' partners available at *axis.com/vms*.

Onscreen controls
Autofocus
Electronic image stabilization
Day/night shift
Defog
Wide dynamic range
Video streaming indicator
Privacy masks
Heater

Edge-to-edge
Siren and light pairing

Event conditions
Application
Audit logs
Device status: above/below/within operating temperature, casing open, IP address blocked/removed, live stream active, network lost, new IP address, shock detected, system ready
Edge storage: recording ongoing, storage disruption, storage health issues detected
I/O: manual trigger, virtual input is active
MQTT: MQTT client connected, stateless
Scheduled and recurring: schedule
Video: average bitrate degradation, day-night mode, live stream open, tampering

Event actions
Day-night mode
Defog: set defog mode, set defog mode while the rule is active
LEDs: flash status LED, flash status LED while the rule is active
MQTT: send MQTT publish message
Notification: HTTP, HTTPS, TCP and email
Overlay text
Recordings: SD card and network share
Security: erase configuration
SNMP trap messages: send, send while the rule is active
Images or video clips: FTP, SFTP, HTTP, HTTPS, network share and email
WDR mode

Built-in installation aids
Pan-tilt-roll: designed to withstand at least 300 full movement cycles, pixel counter, remote zoom and focus, level grid

Analytics

Applications
Included
AXIS Object Analytics, AXIS Image Health Analytics, AXIS Audio Analytics, AXIS Scene Metadata, AXIS Live Privacy Shield[3], AXIS Video Motion Detection
Supported
AXIS Perimeter Defender, AXIS License Plate Verifier
Support for AXIS Camera Application Platform enabling installation of third-party applications, see *axis.com/acap*

AXIS Object Analytics
Object classes: humans, vehicles (types: cars, buses, trucks, bikes, other)
Scenarios: line crossing, object in area, time in area, crossline counting, occupancy in area, tailgating detection, PPE monitoring[BETA], motion in area, motion line crossing
Up to 10 scenarios
Other features: triggered objects visualized with trajectories, color-coded bounding boxes and tables
Polygon include/exclude areas
Perspective configuration
ONVIF Motion Alarm event

AXIS Image Health Analytics
Detection settings:
Tampering: blocked image, redirected image
Image degradation: blurred image, underexposed image
Other features: sensitivity, validation period

2. *This product includes software developed by the OpenSSL Project for use in the OpenSSL Toolkit. (openssl.org), and cryptographic software written by Eric Young (eay@cryptsoft.com).*
3. *Available for download*

AXIS Audio Analytics
Features: sound pressure level, adaptive audio detection, audio classification
Audio classes: coughing fit, glass break, human presence, scream, shout, speech
Event metadata: audio detections, classifications, sound pressure level

AXIS Scene Metadata
Object classes: humans, faces, vehicles (types: cars, buses, trucks, bikes), license plates
Object attributes: vehicle color, upper/lower clothing color, bag, confidence, position

AXIS Live Privacy Shield
Object classes: Humans, (entire body or face only), license plates, backgrounds
Masking type: Pixelated with adjustable block size, color (solid), masking inclusion and exclusion areas
Other features: Dynamic masking up to 10 fps. Supports multiple dynamically masked streams, and one unmasked stream with full frame rate, simultaneously.

Approvals

Product markings
UL/cUL, CE, VCCI, RCM, ICES, FCC

Supply chain
TAA compliant

EMC
CISPR 35, CISPR 32 Class A, EN 55035,
EN 55032 Class A, EN 50121-4, EN 61000-6-1,
EN 61000-6-2
Japan: VCCI Class A
Korea: KS C 9835, KS C 9832 Class A
USA: FCC Part 15 Subpart B Class A
Railway: IEC 62236-4

Safety
CAN/CSA C22.2 No. 62368-1 ed. 3,
IEC/EN/UL 62368-1 ed. 3,

Environment
IEC 60068-2-1, IEC 60068-2-2, IEC 60068-2-6,
IEC 60068-2-14, IEC 60068-2-27, IEC 60068-2-78,
IEC/EN 60529 IP66, IEC/EN 62262 IK10, NEMA 250 Type 4X

Network
NIST SP500-267, IPv6 USGv6

Cybersecurity
ETSI EN 303 645, BSI IT Security Label, FIPS 140

Cybersecurity

Edge security
Software: Signed OS, brute force delay protection, digest authentication and OAuth 2.0 RFC6749 Client Credential Flow/OpenID Authorization Code Flow for centralized ADFS account management, password protection, Axis Cryptographic Module (FIPS 140-2 level 1)
Hardware: Axis Edge Vault cybersecurity platform
Secure keystore: secure element (CC EAL 6+, FIPS 140-3 Level 3), system-on-chip security (TEE)
Axis device ID, signed video, secure boot, encrypted filesystem (AES-XTS-Plain64 256bit)

Network security
IEEE 802.1X (EAP-TLS, PEAP-MSCHAPv2)[4],
IEEE 802.1AE (MACsec PSK/EAP-TLS), IEEE 802.1AR,
HTTPS/HSTS[4], TLS v1.2/v1.3[4], Network Time Security (NTS), X.509 Certificate PKI, host-based firewall

Documentation
AXIS OS Hardening Guide
Axis Vulnerability Management Policy
Axis Security Development Model
AXIS OS Software Bill of Material (SBOM)
To download documents, go to *axis.com/support/cybersecurity/resources*
To read more about Axis cybersecurity support, go to *axis.com/cybersecurity*

Power

Power over Ethernet input
IEEE 802.3at802.3at/802.3bt Type 2 Class 4

Power over Ethernet output
IEEE 802.3af/802.3bt Type 1 Class 3

Power consumption
Max 12.95 W, typical (heater off) 5.3 W

Power budgeting
Supports dynamic power allocation through LLDP-MED
28 W with PoE output
12 W without PoE output

Features
Dynamic power mode, power meter

4. *This product includes software developed by the OpenSSL Project for use in the OpenSSL Toolkit. (openssl.org), and cryptographic software written by Eric Young (eay@cryptsoft.com).*

General

Casing
IP66-, NEMA 4X- and IK10-rated
Polycarbonate hard-coated dome
Plastic casing
Color: white NCS S 1002-B
For repainting instructions, go to the product's support page. For information about the impact on warranty, go to *axis.com/warranty-implication-when-repainting*.

Mounting
Mounting bracket with junction box holes (double-gang, single-gang, 4" square, and 4" octagon)

Connectors
Network (PoE in): Shielded RJ45 10BASE-T/100BASE-TX/1000BASE-T PoE
Network (PoE out): Shielded RJ45 10BASE-T/100BASE-TX PoE

Sensor
Acoustic sensor

Storage
Support for microSD/microSDHC/microSDXC card
For SD card and NAS recommendations see *axis.com*

Operating conditions
Temperature: -40 °C to 50 °C (-40 °F to 122 °F)
Minimum temperature for PTR functionality: -20 °C (-4 °F), after 2 hours of warm-up.
Maximum temperature according to temperature part of NEMA TS 2 (2.2.7.3 – 2.2.7.7): 74 °C (165 °F)
Humidity: 10–100% RH (condensing)

Storage conditions
Temperature: -40 °C to 65 °C (-40 °F to 149 °F)
Humidity: 5–95% RH (non-condensing)

Dimensions
For the overall product dimensions, see the dimension drawing in this datasheet.
Effective Projected Area (EPA): 0.015 m^2 (0.16 ft^2)

Weight
1200 g (2.6 lb)

Box content
Camera, installation guide, connector guard, cable gaskets, owner authentication key

System tools
AXIS Site Designer, AXIS Device Manager, product selector, accessory selector, lens calculator
Available at *axis.com*

Languages
English, German, French, Spanish, Italian, Russian, Simplified Chinese, Japanese, Korean, Portuguese, Polish, Traditional Chinese, Dutch, Czech, Swedish, Finnish, Turkish, Thai, Vietnamese

Warranty
5-year warranty, see *axis.com/warranty*

Software support
New feature development until 2030 (AXIS OS 14)
Support until 2035-12-31 (AXIS OS LTS 2030–2035)
Read more about the AXIS OS lifecycle at *help.axis.com/axis-os*

Part numbers
Available at *axis.com/products/axis-p3407-ve#part-numbers*

Optional accessories

Portcast
AXIS D6210 Air Quality Sensor

Installation
AXIS T8415 Wireless Installation Tool

Storage
AXIS Surveillance Cards

AXIS TP3845-E Weathershield
For more accessories, go to *axis.com/products/axis-p3407-ve#compatible-products*

Sustainability

Substance control
PVC free, BFR/CFR free in accordance with JEDEC/ECA Standard JS709
RoHS in accordance with EU RoHS Directive 2011/65/EU and 2015/863, and standard EN IEC 63000:2018
REACH in accordance with (EC) No 1907/2006. For SCIP UUID, see *echa.europa.eu*

Materials

Renewable carbon-based plastic content: 63% (recycled: 7%, bio-based: 54%, carbon capture based: 2%)
Screened for conflict minerals in accordance with OECD guidelines
To read more about sustainability at Axis, go to *axis.com/about-axis/sustainability*

Environmental responsibility

axis.com/environmental-responsibility
Axis Communications is a signatory of the UN Global Compact, read more at *unglobalcompact.org*

Detect, Observe, Recognize, Identify (DORI)

	DORI definition	Distance (wide)	Distance (tele)
Detect	25 px/m (8 px/ft)	60 m (196.8 ft)	170 m (558 ft)
Observe	63 px/m (19 px/ft)	23.8 m (78.1 ft)	67.5 m (221.4 ft)
Recognize	125 px/m (38 px/ft)	12 m (40 ft)	34 m (112 ft)
Identify	250 px/m (76 px/ft)	6 m (20 ft)	17 m (56 ft)

The DORI values are calculated using pixel densities for different use cases as recommended by the EN-62676-4 standard. The calculations use the center of the image as the reference point and consider lens distortion. The possibility to recognize or identify a person or object depends on factors such as object motion, video compression, lighting conditions, and camera focus. Use margins when planning. The pixel density varies across the image, and the calculated values can differ from the distances in the real world.

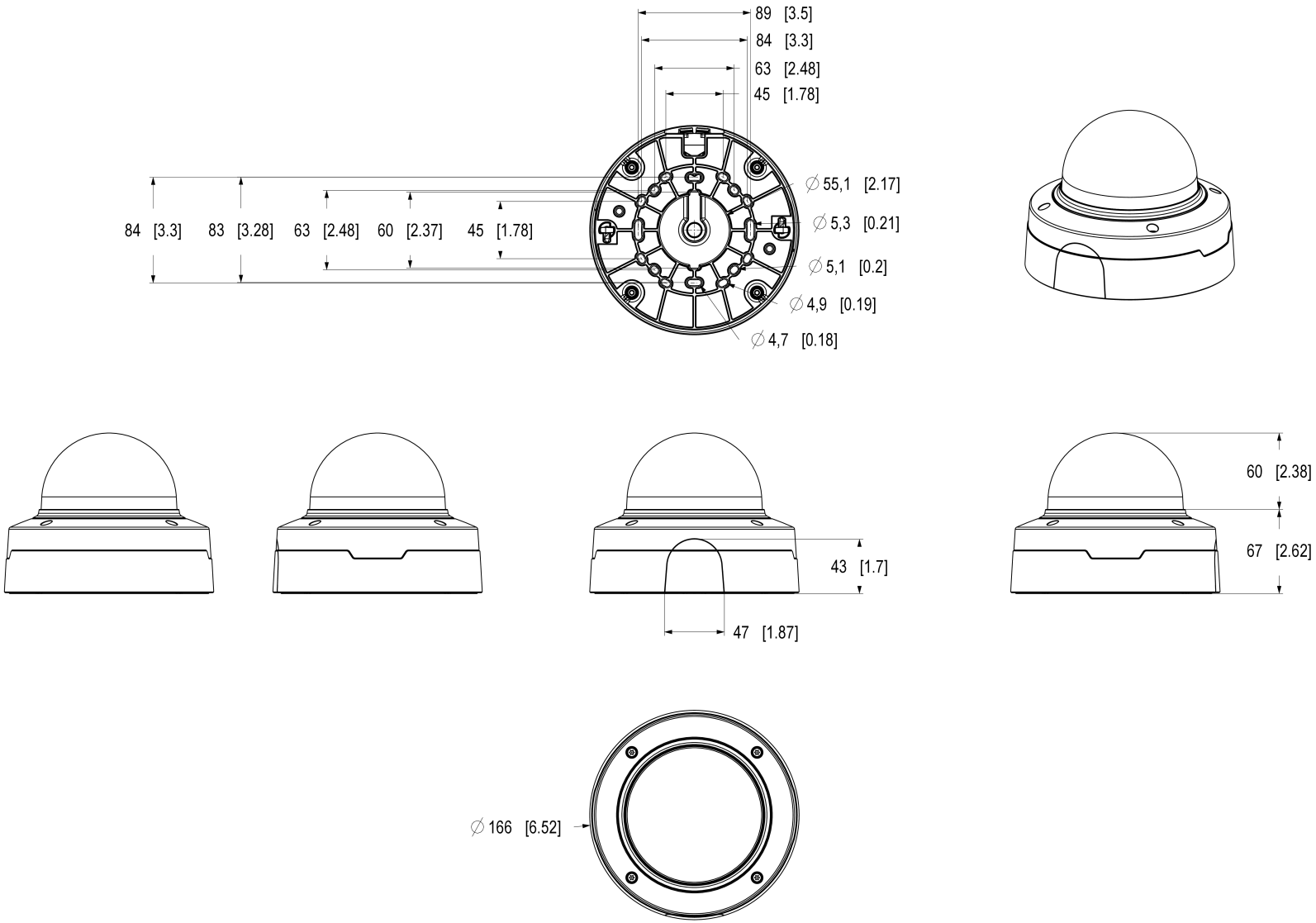

AXIS COMMUNICATIONS

© 2026 Axis Communications AB. All rights reserved.

AXIS P3407-VE Dome Camera / P3408-VE Dome Camera

Dimensions in mm [inch]

Date	Version	Scale
2026 Apr-28	M1.3	1:2
Drawing Number	Size	Sheet
3508044	A2	1(1)

Highlighted capabilities

AXIS Audio Analytics

AXIS Audio Analytics uses adaptive audio detection to generate alarms on sudden increases in sound volume. With AI-based classifiers, it can detect screaming and shouting. You can also get extra confirmation by combining AXIS Audio Analytics with video analytics. This smart application only transmits metadata, ensuring privacy is safeguarded. A core feature of AXIS OS, AXIS Audio Analytics comes preinstalled at no extra cost.

Axis Edge Vault

Axis Edge Vault is the hardware-based cybersecurity platform that safeguards the Axis device. It forms the foundation that all secure operations depend on and offer features to protect the device's identity, safeguard its integrity and protect sensitive information from unauthorized access. For instance, **secure boot** ensures that a device can boot only with **signed OS**, which prevents physical supply chain tampering. With signed OS, the device is also able to validate new device software before accepting to install it. And the **secure keystore** is the critical building-block for protecting cryptographic information used for secure communication (IEEE 802.1X, HTTPS, Axis device ID, access control keys etc.) against malicious extraction in the event of a security breach. The secure keystore and secure connections are provided through a Common Criteria or FIPS 140 certified hardware-based cryptographic computing module.

Furthermore, signed video ensures that video evidence can be verified as untampered. Each camera uses its unique video signing key, which is securely stored in the secure keystore, to add a signature into the video stream allowing video to be traced back to the Axis camera from where it originated.

To read more about Axis Edge Vault, go to *axis. com/ solutions/edge-vault*.

AXIS Live Privacy Shield

Remotely monitor activities both indoors and outdoors while safeguarding privacy in real-time.

With AI-based dynamic masking you can choose what to mask or blur while addressing rules and regulations protecting privacy and personal data. The application enables masking of moving and still objects such as humans, license plates, or backgrounds. The application works in real-time and on both live and recorded video streams.

AXIS Object Analytics

AXIS Object Analytics is a preinstalled, multifeatured video analytics that detects and classifies humans, vehicles, and types of vehicles. Thanks to AI-based algorithms and behavioral conditions, it analyzes the scene and their spatial behavior within – all tailored to your specific needs. Scalable and edge-based, it requires minimum effort to set up and supports various scenarios running simultaneously.

Pan-tilt-roll-zoom (PTRZ)

PTRZ functionality includes the ability of a camera to rotate around its vertical, lateral, and longitudinal axes. The camera's focal length is adjustable to achieve a narrower or wider field of view. Thanks to the remote functionality, you can quickly adjust and readjust the camera view remotely over the network, saving time and effort. PTRZ functionality also gives you the flexibility to make future adjustments easily, ensuring less disruption, less downtime, and that no dispatched technician is needed.

© 2026 Axis Communications AB. AXIS COMMUNICATIONS, AXIS, ARTPEC and VAPIX are registered trademarks of Axis AB in various jurisdictions. All other trademarks are the property of their respective owners. We reserve the right to introduce modifications without notice.