AXIS D6210

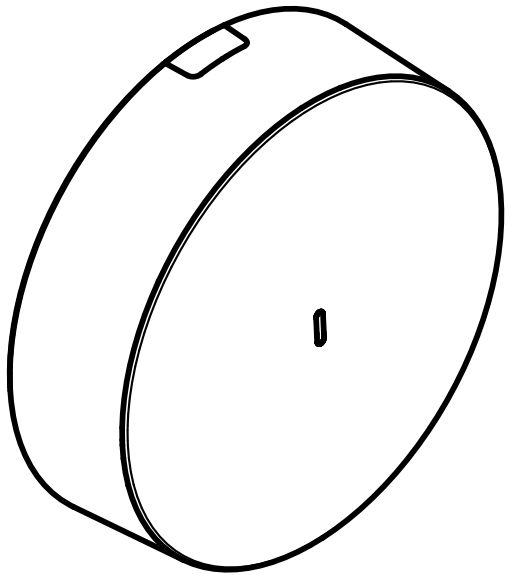

Installation guide
Guide d'installation
Installationsanleitung
Guida all'installazione
Guía de instalación
インストールガイド
Guia de instalação
Руководство по установке
설치가이드
安装指南
Panduan instalasi
Kurulum kılavuzu

Read this first

Read through this installation guide carefully before you install the product. Keep the installation guide for future reference.

Legal considerations

Audio surveillance can be regulated by laws that vary from country to country. Check the laws in your local region before using this product for surveillance purposes.

Liability

Every care has been taken in the preparation of this document. Please inform your local Axis office of any inaccuracies or omissions. Axis Communications AB cannot be held responsible for any technical or typographical errors and reserves the right to make changes to the product and manuals without prior notice. Axis Communications AB makes no warranty of any kind with regard to the material contained within this document, including, but not limited to, the implied warranties of merchantability and fitness for a particular purpose. Axis Communications AB shall not be liable nor responsible for incidental or consequential damages in connection with the furnishing, performance or use of this material. This product is only to be used for its intended purpose.

Intellectual property rights

Axis AB has intellectual property rights relating to technology embodied in the product described in this document. In particular, and without limitation, these intellectual property rights may include one or more of the patents listed at *axis.com/patent* and one or more additional patents or pending patent applications in the US and other countries.

Equipment modifications

This equipment must be installed and used in strict accordance with the instructions given in the user documentation. This equipment contains no

user-serviceable components. Unauthorized equipment changes or modifications will invalidate all applicable regulatory certifications and approvals.

Trademark acknowledgements

AXIS COMMUNICATIONS, AXIS, ARTPEC and VAPIX are registered trademarks of Axis AB in various jurisdictions. All other trademarks are the property of their respective owners.

Regulatory information

Europe

CE

This product complies with the applicable CE marking directives and harmonized standards:

- Electromagnetic Compatibility (EMC) Directive 2014/30/EU. See *Electromagnetic compatibility (EMC), on page 3*.
- Low Voltage Directive (LVD) 2014/35/EU. See *Safety, on page 6*.
- Restriction of Hazardous Substances (RoHS) Directive 2011/65/EU and 2015/863, including any amendments, updates or replacements. See *Disposal and recycling, on page 6*.

A copy of the original declaration of conformity may be obtained from Axis Communications AB. See *Contact information, on page 8*.

Electromagnetic compatibility (EMC)

This equipment has been designed and tested to fulfill applicable standards for:

- Radio frequency emission when installed according to the instructions and used in its intended environment.

- Immunity to electrical and electromagnetic phenomena when installed according to the instructions and used in its intended environment.

USA

This device complies with part 15 of the FCC Rules. Operation is subject to the following two conditions:

1. This device may not cause harmful interference, and
2. this device must accept any interference received, including interference that may cause undesired operation.

This equipment has been tested using a shielded network cable (STP) and found to comply with the limits for a Class A digital device, pursuant to part 15 of the FCC Rules. These limits are designed to provide reasonable protection against harmful interference when the equipment is operated in a commercial environment. This equipment generates, uses, and can radiate radio frequency energy and, if not installed and used in accordance with the instruction manual, may cause harmful interference to radio communications. Operation of this equipment in a residential area is likely to cause harmful interference in which case the user will be required to correct the interference at his own expense. The product shall be connected using a shielded network cable (STP) that is properly grounded.

Contact information

Axis Communications Inc.
300 Apollo Drive
Chelmsford, MA 01824
United States of America
Tel: +1 978 614 2000

Canada

This digital apparatus complies with CAN ICES-3 (Class A). The product shall be connected using a shielded network cable (STP) that is properly

grounded. Cet appareil numérique est conforme à la norme CAN NMB-3 (classe A). Le produit doit être connecté à l'aide d'un câble réseau blindé (STP) qui est correctement mis à la terre.

Europe

This digital equipment fulfills the requirements for RF emission according to the Class A limit of EN 55032. The product shall be connected using a shielded network cable (STP) that is properly grounded. Notice! This is a Class A product. In a domestic environment this product may cause RF interference, in which case the user may be required to take adequate measures.

Australia/New Zealand

This digital equipment fulfills the requirements for RF emission according to the Class A limit of AS/NZS CISPR 32. The product shall be connected using a shielded network cable (STP) that is properly grounded. Notice! This is a Class A product. In a domestic environment this product may cause RF interference, in which case the user may be required to take adequate measures.

Japan

この装置は、クラスA機器です。この装置を住宅環境で使用すると電波妨害を引き起こすことがあります。この場合には使用者が適切な対策を講ずるよう要求されることがあります。 VCCI – A
本製品は、シールドネットワークケーブル(STP)を使用して接続してください。また適切に接地してください。
本製品は電気通信事業者（移動通信会社、固定通信会社、インターネットプロバイダ等）の通信回線（公衆無線 LAN を含む）に直接接続することができません。本製品をインターネットに接続する場合は、必ずルータ等を経由し接続してください。

Korea

이 기기는 업무용 환경에서 사용할 목적으로 적합성평가를 받은 기기로서 가정용 환경에서 사용하는 경우 전파간섭의 우려가 있습니

다. 적절히 접지된 STP (shielded twisted pair) 케이블을 사용하여 제품을 연결 하십시오.

Safety

When used with Power over Ethernet (PoE), the Power Sourcing Equipment (PSE) shall comply with IEEE 802.3at and Limited Power Source (LPS) according to annex Q of IEC/EN/UL 62368-1.

We recommend the use of Axis PoE+ midspans or Axis PoE+ switches.

Laser safety

This Class 1 laser product complies with IEC 60825-1:2014 and EN 60825-1:2014 + A11:2021.

Disposal and recycling

When this product has reached the end of its useful life, dispose of it according to local laws and regulations. For information about your nearest designated collection point, contact your local authority responsible for waste disposal. In accordance with local legislation, penalties may be applicable for incorrect disposal of this waste.

Europe



This symbol means that the product shall not be disposed of together with household or commercial waste. Directive 2012/19/EU on waste electrical and electronic equipment (WEEE) is applicable in the European Union member states. To prevent potential harm to human health and the environment, the product must be disposed of in an approved and environmentally safe recycling process. For information about your nearest designated collection point, contact your local authority responsible for waste disposal. Businesses should contact the product supplier for information about how to dispose of this product correctly.

This product complies with the requirements of Directive 2011/65/EU and 2015/863 on the restriction of the use of certain hazardous substances in electrical and electronic equipment (RoHS).

China



This product complies with the requirements of SJ/T 11364-2024, Marking for the restriction of hazardous substances in electrical and electronic products.

有毒有害物质或元素	
部件名称	电气实装部分
铅 (Pb)	X
汞 (Hg)	○
镉 (Cd)	○
六价铬 (Cr(VI))	○
多溴联苯 (PBB)	○
多溴二苯醚 (PBDE)	○
邻苯二甲酸二正丁酯 (DBP)	○
邻苯二甲酸二异丁酯 (DIBP)	○

邻苯二甲酸丁苄酯 (BBP)	○
邻苯二甲酸二（2–乙基）己酯 (DEHP)	○
○ : 表示该有毒有害物质在该部件均质材料中的含量均在GB/T 26572标准规定的限量要求以下。 X: 表示该有毒有害物质至少在该部件的某一均质材料中的含量超出GB/T 26572标准规定的限量要求。	

Contact information

Axis Communications AB
Gränden 1
223 69 Lund
Sweden

Tel: +46 46 272 18 00

axis.com

Warranty information

For information about Axis' product warranty and thereto related information, go to *axis.com/warranty*.

Support

If you need technical assistance, contact your Axis reseller. If your questions can't be answered immediately, your reseller will forward your question through appropriate channels to ensure a quick response. At *axis.com/support* you can:

- download user documentation and software updates
- find answers to your questions in the FAQ portal

- chat with and report problems to Axis support by logging in to your private support area

Cybersecurity

Refer to the product user manual at *help.axis.com* to learn about our cybersecurity approach.

Learn more!

Visit Axis learning center *axis.com/learning* for useful trainings, webinars, tutorials and guides.

English

Safety instructions

⚠ CAUTION

Possibly hazardous radiation exposure from this product. To avoid exposure, use the specified controls or adjustments or performance of procedures.

NOTICE

- This is a Class 1 laser product
- The Axis product shall be used in compliance with local laws and regulations.
- Axis recommends using a shielded network cable (STP).
- Store the Axis product in a dry and ventilated environment.
- Avoid exposing the Axis product to shocks or heavy pressure.
- Use only applicable tools when installing the Axis product. Using excessive force with power tools could cause damage to the product.
- To clean the device, use a soft cloth dampened with pure lukewarm water.
- Don't use chemicals such as window cleaner or acetone to clean your device.
- Use only accessories that comply with the technical specification of your product. These can be provided by Axis or a third party. Axis recommends using Axis power source equipment compatible with your product.
- Use only spare parts provided by or recommended by Axis.
- Do not attempt to repair the product yourself. Contact Axis support or your Axis reseller for service matters.

Transportation

NOTICE

- When transporting the Axis product, use the original packaging or equivalent to prevent damage to the product.

Français

Consignes de sécurité

⚠ CAUTION

Ce produit est susceptible d'émettre un rayonnement dangereux. Pour éviter toute exposition, utilisez les commandes ou réglages spécifiés ou les performances des procédures.

NOTICE

- Il s'agit d'un produit laser de Classe 1
- Le produit Axis doit être utilisé conformément aux lois et règlements locaux.
- Axis recommande d'utiliser un câble réseau blindé (STP).
- Conserver ce produit Axis dans un environnement sec et ventilé.
- Ne pas exposer ce produit Axis aux chocs ou aux fortes pressions.
- Utiliser uniquement des outils recommandés pour l'installation de l'appareil Axis. L'application d'une force excessive sur l'appareil avec des outils puissants pourrait l'endommager.
- Pour nettoyer le dispositif, utilisez un chiffon doux imbibé d'eau tiède pure.
- N'utilisez pas de produits chimiques tels que le nettoyant pour vitres ou l'acétone pour nettoyer votre dispositif.
- Utiliser uniquement des accessoires conformes aux caractéristiques techniques de votre produit. Ils peuvent être fournis par Axis ou un

tiers. Axis recommande d'utiliser un équipement d'alimentation Axis compatible avec votre produit.
- Utiliser uniquement les pièces de rechange fournies ou recommandées par Axis.
- Ne pas essayer de réparer vous-même ce produit. Contacter l'assistance technique d'Axis ou votre revendeur Axis pour des problèmes liés à l'entretien.

Transport

NOTICE

- Lors du transport du produit Axis, utilisez l'emballage d'origine ou un équivalent pour éviter d'endommager le produit.

Deutsch

Sicherheitsanweisungen

⚠ CAUTION

Von diesem Produkt geht eine potenziell gefährliche Strahlenbelastung aus. Zur Vermeidung einer Belastung die angegebenen Steuerelemente, Einstellungen oder Verfahrensabläufe verwenden.

NOTICE

- Dies ist ein Produkt der Laserklasse 1.
- Das Axis Produkt muss unter Beachtung der geltenden Gesetze und Bestimmungen betrieben werden.
- Axis empfiehlt, ein abgeschirmtes Netzwerk-Kabel (STP) zu verwenden.
- Lagern Sie das Axis Produkt in einer trockenen und belüfteten Umgebung.
- Das Axis Produkt weder Stößen noch starkem Druck aussetzen.
- Verwenden Sie bei der Installation des Axis Produkts ausschließlich passende Werkzeuge. Ein zu großer Kraftaufwand mit elektrischen Werkzeugen kann das Produkt beschädigen.
- Verwenden Sie zur Reinigung des Geräts ein weiches, mit klarem, lauwarmem Wasser angefeuchtetes Tuch.
- Verwenden Sie zur Reinigung Ihres Geräts keine chemischen Substanzen wie Fensterreiniger oder Aceton.
- Verwenden Sie nur Zubehör, das den technischen Vorgaben Ihres Produkts entspricht. Dieses ist von Axis oder Drittanbietern erhältlich. Axis empfiehlt die mit Ihrem Produkt kompatible Stromversorgung von Axis.
- Verwenden Sie ausschließlich Ersatzteile die von Axis angeboten oder empfohlen werden.
- Versuchen Sie nicht, dieses Produkt selbsttätig zu reparieren. Wenden Sie sich bezüglich Reparatur und Wartung an den Axis Support oder Ihren Axis Händler.

Transport

NOTICE

- Bei Bedarf transportieren Sie das Axis Produkt in der Originalverpackung oder einer entsprechenden Verpackung, so dass Schäden vermieden werden.

Italiano

Istruzioni per la sicurezza

⚠ CAUTION

Questo dispositivo potrebbe esporre a radiazioni pericolose. Per evitare l'esposizione, utilizzare i comandi o le regolazioni o le prestazioni delle procedure specificati.

NOTICE

- Questo è un dispositivo laser Classe 1.
- Il dispositivo Axis deve essere utilizzato in conformità alle leggi e alle normative locali.
- Axis consiglia l'uso di un cavo di rete schermato (STP).
- Conservare il dispositivo Axis in un ambiente asciutto e ventilato.
- Evitare di esporre il dispositivo Axis a urti o pressioni eccessive.
- Utilizzare solo strumenti applicabili quando si installa il prodotto Axis. Se si utilizza una forza eccessiva con strumenti non adatti è possibile causare danni al dispositivo.
- Per pulire il dispositivo, utilizzare un panno morbido inumidito con acqua tiepida.
- Non utilizzare sostanze chimiche come detergenti per vetri o acetone per pulire il dispositivo.
- Utilizzare solo accessori compatibili con le specifiche tecniche del dispositivo. Questi possono essere forniti da Axis o da terze parti. Axis consiglia l'uso dell'apparecchiatura di alimentazione Axis compatibile con il dispositivo.
- Utilizzare solo parti di ricambio fornite o consigliate da Axis.
- Non tentare di riparare il dispositivo da soli. Contattare l'assistenza o il rivenditore Axis per questioni relative alla manutenzione.

Trasporto

NOTICE

- Durante il trasporto del dispositivo Axis, utilizzare l'imballaggio originale o equivalente per evitare danni al dispositivo.

Español

Instrucciones de seguridad

⚠ CAUTION

Este producto genera exposición a radiación posiblemente peligrosa. Para evitar la exposición, utilice los controles o ajustes especificados, y siga los procedimientos indicados.

NOTICE

- Este es un producto láser de clase 1.
- Este producto de Axis debe utilizarse de acuerdo con las leyes y normativas locales.
- Axis recomienda utilizar un cable de red blindado (STP).
- Almacene el producto de Axis en un entorno seco y ventilado.
- Evite exponer el producto Axis a golpes o presiones excesivas.
- Use solo las herramientas adecuadas al instalar el producto Axis. La aplicación de una fuerza excesiva con herramientas eléctricas puede provocar daños en el producto.
- Utilice un paño suave humedecido con agua tibia para limpiar el dispositivo.
- No utilice productos químicos como un limpiacristales o acetona para limpiar el dispositivo.
- Utilice solo accesorios que cumplan con las especificaciones técnicas de su producto. Puede obtenerlos de Axis o de un tercero. Axis

recomienda utilizar un equipo de suministro de alimentación de Axis compatible con su producto.
- Utilice solo piezas de recambio suministradas o recomendadas por Axis.
- No intente reparar el producto usted mismo. Contacte son el servicio de asistencia de Axis o a su distribuidor de Axis para cualquier tema relacionado con el mantenimiento.

Transporte

NOTICE

- Cuando transporte el producto de Axis, utilice el embalaje original o un equivalente para evitar daños en el producto.

日本語

安全に関する指示

⚠ CAUTION

本製品は有害な放射線を発する可能性があります。放射線にさらされることがないように、指定された方法で制御、調整、または手順を行ってください。

NOTICE

- 本装置はクラス1レーザー製品です。
- 本製品は、お使いになる地域の法律や規制に準拠して使用してください。
- Axisは、シールドネットワークケーブル (STP) の使用を推奨します。
- 本製品は乾燥した換気のよい環境に保管してください。
- 本製品に衝撃または強い圧力を加えないでください。
- 本製品を設置する際には、適切な工具のみを使用してください。電動工具を使用して過剰な力をかけると、製品が損傷することがあります。
- ぬるま湯で湿らせた柔らかいクロスを使用してデバイスを清掃してください。
- 窓ガラス用洗剤やアセトンなどの化学薬品を使用して装置をクリーニングしないでください。
- 製品の技術仕様に準拠したアクセサリーのみを使用してください。これらのアクセサリーは、Axisまたはサードパーティから入手できます。Axisは、ご使用の製品と互換性のあるAxis給電ネットワークスイッチの使用を推奨します。
- Axisが提供または推奨する交換部品のみを使用してください。
- 製品を自分で修理しないでください。修理については、Axisサポートまたは販売代理店にお問い合わせください。

輸送

NOTICE

- 本製品を運搬する際は、製品が損傷しないよう、元の梱包か同等の梱包を使用してください。

Português

Instruções de segurança

⚠ CAUTION

Este produto emite exposição de radiação potencialmente perigosa. Para evitar a exposição, use os controles ou ajustes especificados ou siga os procedimentos descritos.

NOTICE

- Este é um produto Classe 1
- O produto Axis deve ser usado em conformidade com as leis e regulamentações locais.
- A Axis recomenda usar um cabo de rede blindado (STP).
- Armazene o produto Axis em um ambiente seco e ventilado.
- Evite expor o produto Axis a impactos ou pressão elevada.
- Use apenas as ferramentas recomendadas ao instalar o produto Axis. O uso de força excessiva com ferramentas elétricas poderia danificar o produto.
- Para limpar o dispositivo, use um pano macio umedecido com água morna pura.
- Não use produtos químicos como limpa-vidros ou acetona para limpar o dispositivo.
- Utilize apenas acessórios que atendam às especificações técnicas do produto. Esses poderão ser fornecidos pela Axis ou por terceiros. A

Axis recomenda usar equipamento de fonte de alimentação Axis compatível com seu produto.
- Utilize apenas peças sobressalentes fornecidas ou recomendadas pela Axis.
- Não tente reparar o produto por conta própria. Entre em contato com o suporte ou seu revendedor Axis para quaisquer questões relacionadas a serviços.

Transporte

NOTICE

- Ao transportar o produto Axis, use a embalagem original ou equivalente para evitar danos ao produto.

РУССКИЙ

Инструкции в экстренных ситуациях

⚠ CAUTION

Это устройство может излучать опасное для глаз световое излучение. Чтобы избежать его воздействия, используйте рекомендованные меры контроля или охраны труда.

NOTICE

- Это лазерное устройство класса 1
- Это изделие Axis следует использовать в соответствии с местными законами и нормативами.
- Компания Axis рекомендует использовать экранированный сетевой кабель (STP).
- Устройство Axis должно храниться в сухом, хорошо проветриваемом помещении.
- Не допускайте ударов или сильного давления на устройство Axis.
- При установке устройства Axis используйте только предназначенные для этого инструменты. Приложение чрезмерных усилий к инструментам может привести к повреждению устройства.
- Для очистки устройства используйте мягкую ткань, смоченную чистой теплой водой.
- Не используйте для очистки устройства средство для мытья окон, ацетон и другие подобные химические вещества.
- Используйте только принадлежности, которые соответствуют техническим характеристикам данного устройства. Они могут поставляться компанией Axis или сторонним производителем. Компания Axis рекомендует использовать блоки питания Axis, совместимые с устройством.
- Используйте только запасные части, поставляемые или рекомендованные компанией Axis.
- Не пытайтесь отремонтировать устройство самостоятельно. По вопросам обслуживания обращайтесь в службу поддержки Axis или к своему реселлеру Axis.

Транспортировка

NOTICE

- При транспортировке устройства Axis используйте оригинальную упаковку или ее эквивалент во избежание повреждения изделия.

中文

安全说明

⚠ CAUTION

本产品可能产生有害辐射。为避免暴露于有害辐射下，请使用规定的控制或调整或执行程序。

NOTICE

- 该设备为 1 类激光产品
- 使用安讯士产品时应遵守当地法律和法规。
- 安讯士推荐使用屏蔽网络电缆 (STP)。
- 在干燥通风的环境中存放安讯士产品。
- 避免将安讯士产品暴露在冲击或重压下。
- 安装安讯士产品时，仅使用适用的工具。使用电动工具过度施力可能导致产品损坏。
- 清洁设备时，请使用蘸有纯净温水的软布。
- 请勿使用窗户清洁剂或丙酮等化学品来清洁设备。
- 仅使用符合产品技术规格的附件。这些附件可由安讯士或第三方提供。安讯士推荐使用与产品兼容的安讯士电源设备。
- 仅使用安讯士提供或推荐的备件。
- 请勿尝试自行维修产品。有关服务事项，请联系安讯士支持部门或安讯士经销商。

运输

NOTICE

- 安讯士产品运输途中，应使用其原包装或等效包装，以防对产品造成损坏。

한국어

안전 지침

⚠ CAUTION

이 제품에서는 유해한 방사선이 방출될 수 있습니다. 노출을 피하기 위해 지정된 제어 또는 조정 또는 절차 수행을 사용하십시오.

NOTICE

- 이 제품은 Class 1 레이저 제품입니다.
- Axis 제품은 해당 지역 법률 및 규정을 준수하여 사용해야 합니다.
- Axis는 차폐 네트워크 케이블(STP) 사용을 권합니다.
- Axis 제품은 건조하고 환기가 잘 되는 곳에 보관하십시오.
- Axis 제품에 충격이나 강한 압력을 가하지 마십시오.
- Axis 제품을 설치할 때에는 적합한 도구만 사용하십시오. 전동 공구로 과도한 힘을 사용하면 제품에 손상을 줄 수 있습니다.
- 장치를 세척하려면 순수한 미온수를 적신 부드러운 천을 사용하십시오.
- 창문 세정제나 아세톤과 같은 화학 물질을 사용하여 장치를 세척하지 마십시오.
- 제품의 기술적 사양을 준수하는 액세서리만 사용하십시오. 이

러한 액세서리는 Axis 또는 제3자가 제공할 수 있습니다. Axis는 귀하의 제품과 호환되는 Axis 전원 장비 사용을 권합니다.
- Axis가 공급하거나 추천하는 예비 부품만 사용하십시오.
- 제품을 직접 수리하려고 하지 마십시오. 서비스 문제에 대해 Axis 지원 부서 또는 Axis 리셀러에 문의하십시오.

운반

NOTICE

- Axis 제품을 운반할 때는 원래 포장이나 이에 준하는 포장을 사용해 제품이 손상되지 않도록 하십시오.

繁體中文

安全指示

⚠ CAUTION

本產品會造成可能有害的輻射曝露。為避免曝露於輻射中，請使用指定的控制或調整措施，或是規定的程序行為。

NOTICE

- 本設備為 Class 1 雷射產品。
- Axis 產品的使用應符合當地法規。
- Axis 建議使用遮蔽型網路線 (STP)。
- 請將安迅士產品存放在乾燥且通風良好的環境中。
- 避免讓 Axis 產品受到衝擊或重壓。
- 安裝 Axis 產品時，僅可使用適合的工具。使用電動工具時，過度施力可能會造成產品損壞。
- 清潔設備時，使用沾有純淨溫水的軟布。
- 請勿使用窗戶清潔劑或丙酮等化學物質來清潔設備。
- 所有配件必須符合產品的技術規格。可由 Axis 或第三方供應商提供。Axis 建議使用相容於產品的 Axis 電源設備。
- 只使用 Axis 提供或推薦的備用零件。
- 請勿嘗試自行修理產品。請向 Axis 技術支援人員或 Axis 經銷商洽詢維修事宜。

運輸

NOTICE

- 當運送安迅士產品時，請使用原包裝或有相同保護效果的包裝，以防止產品損壞。

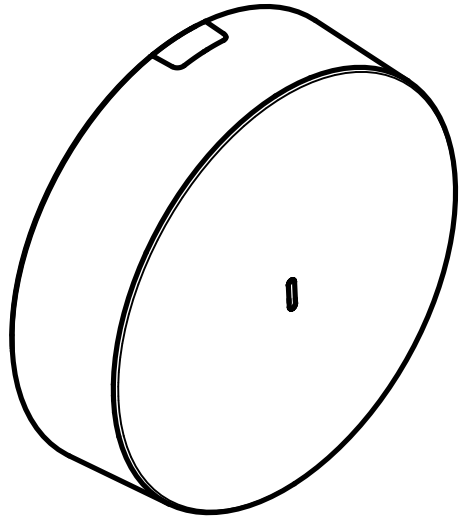

1x

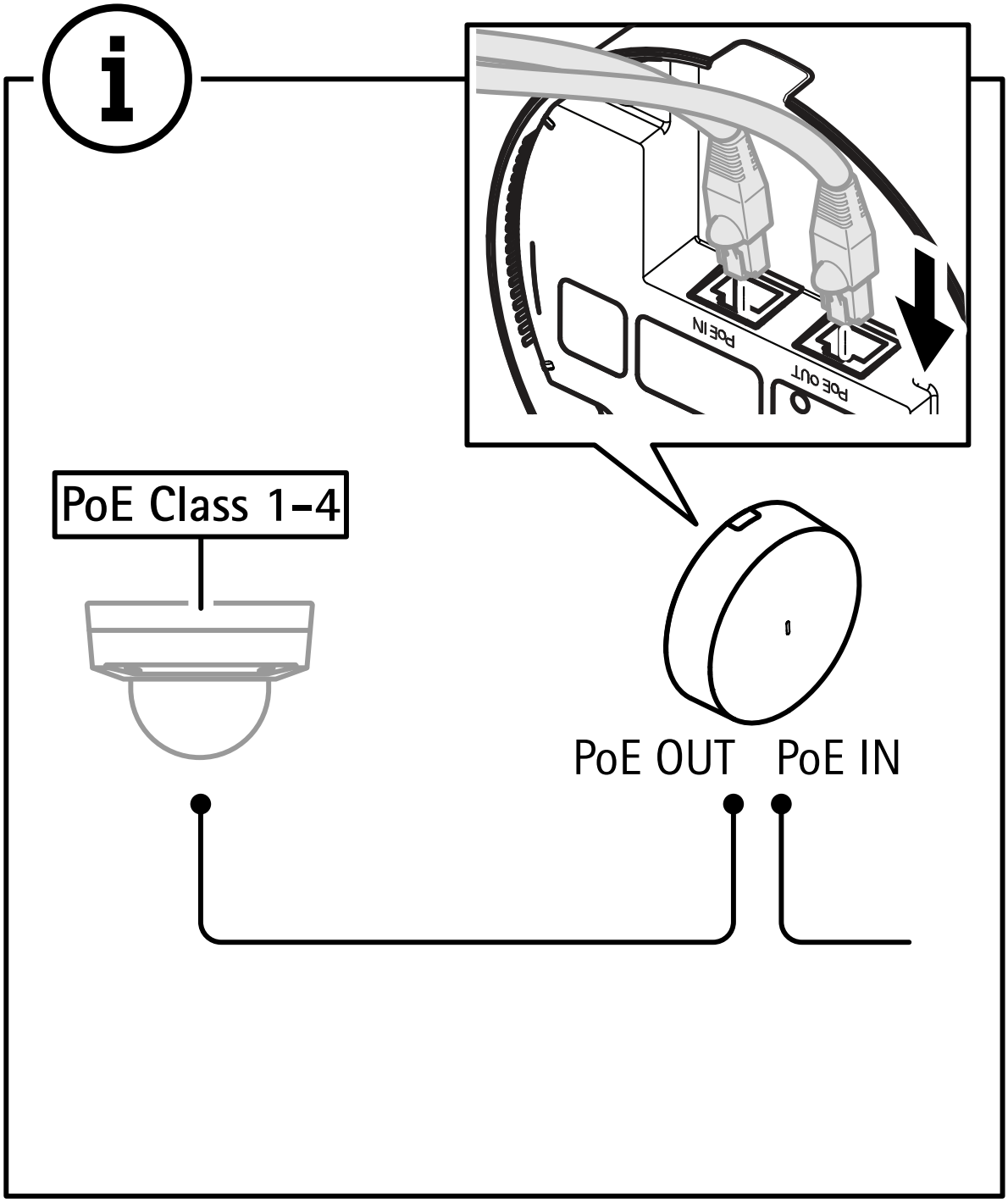
PoE IN
PoE OUT
PoE Class 1-4
PoE OUT
PoE IN

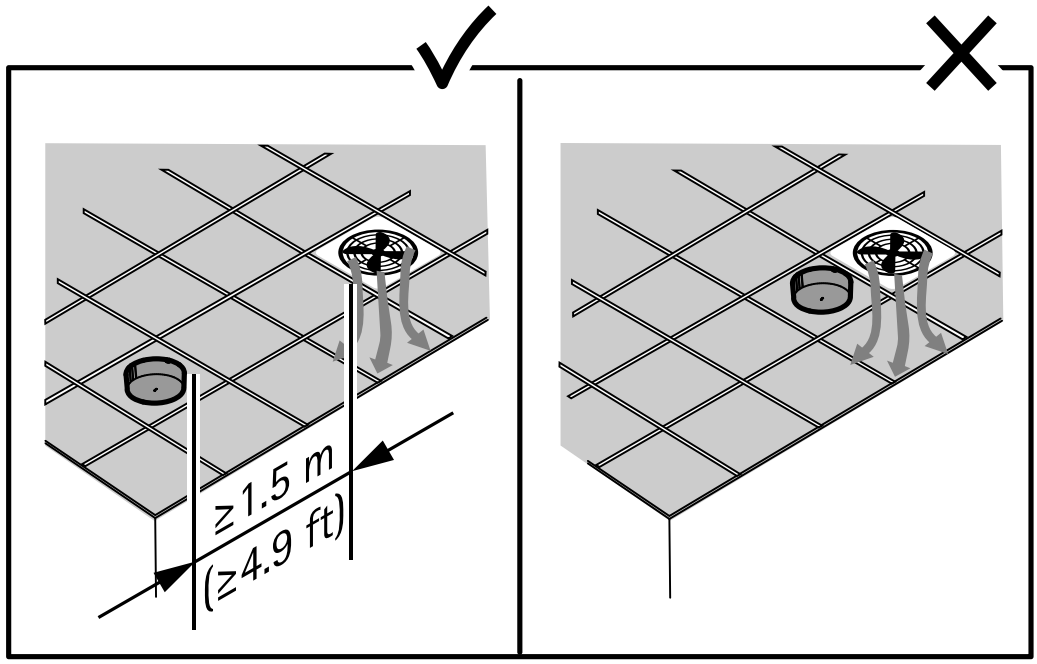
≥1.5 m
(≥4.9 ft)

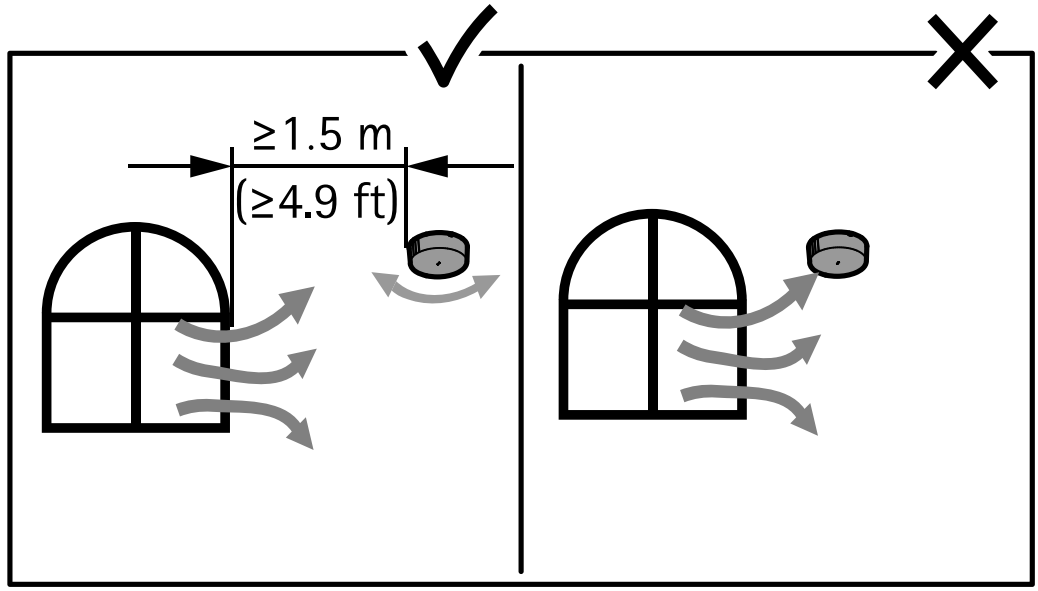
≥1.5 m
(≥4.9 ft)

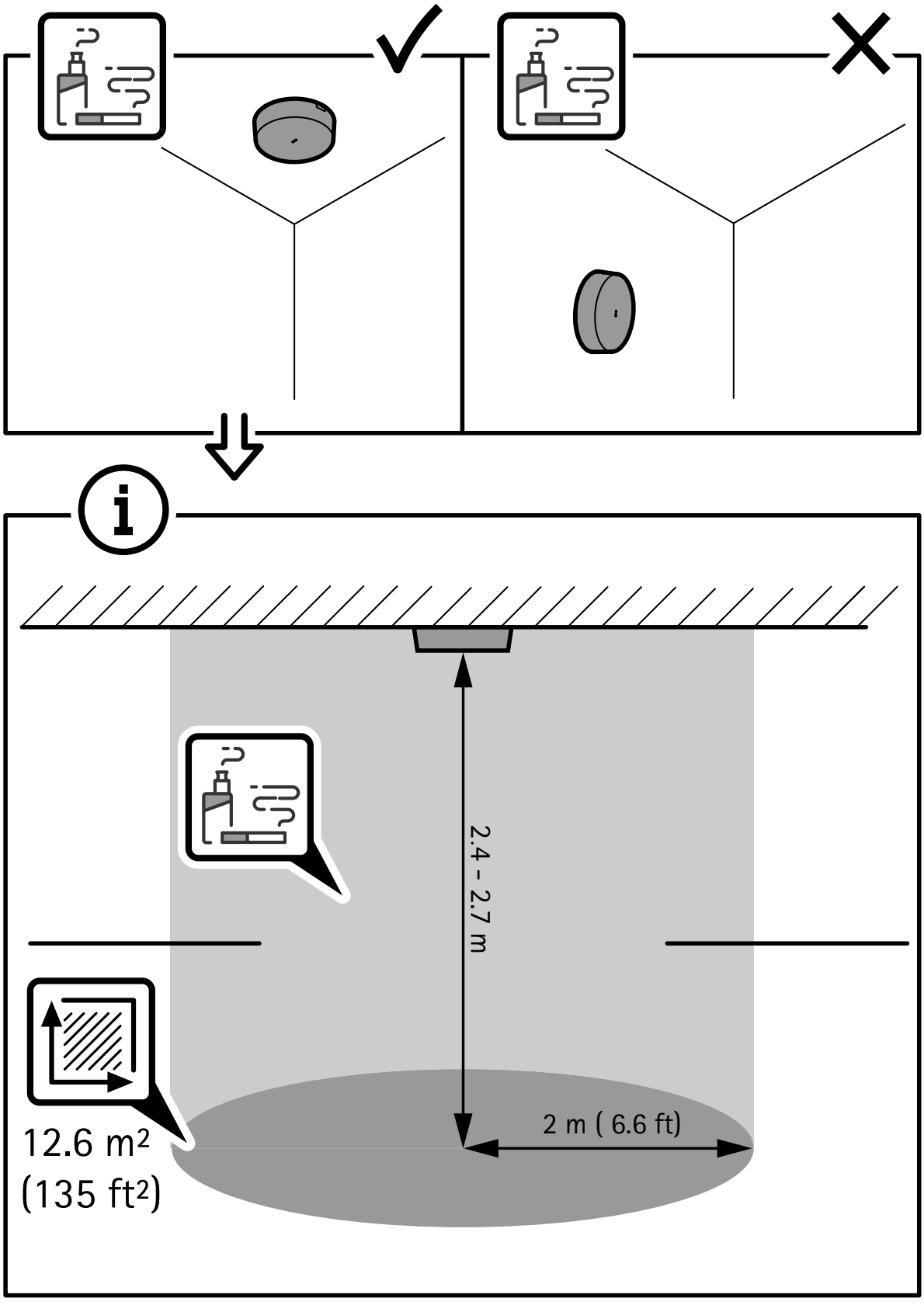
2.4 - 2.7 m
2 m (6.6 ft)
12.6 m²
(135 ft²)

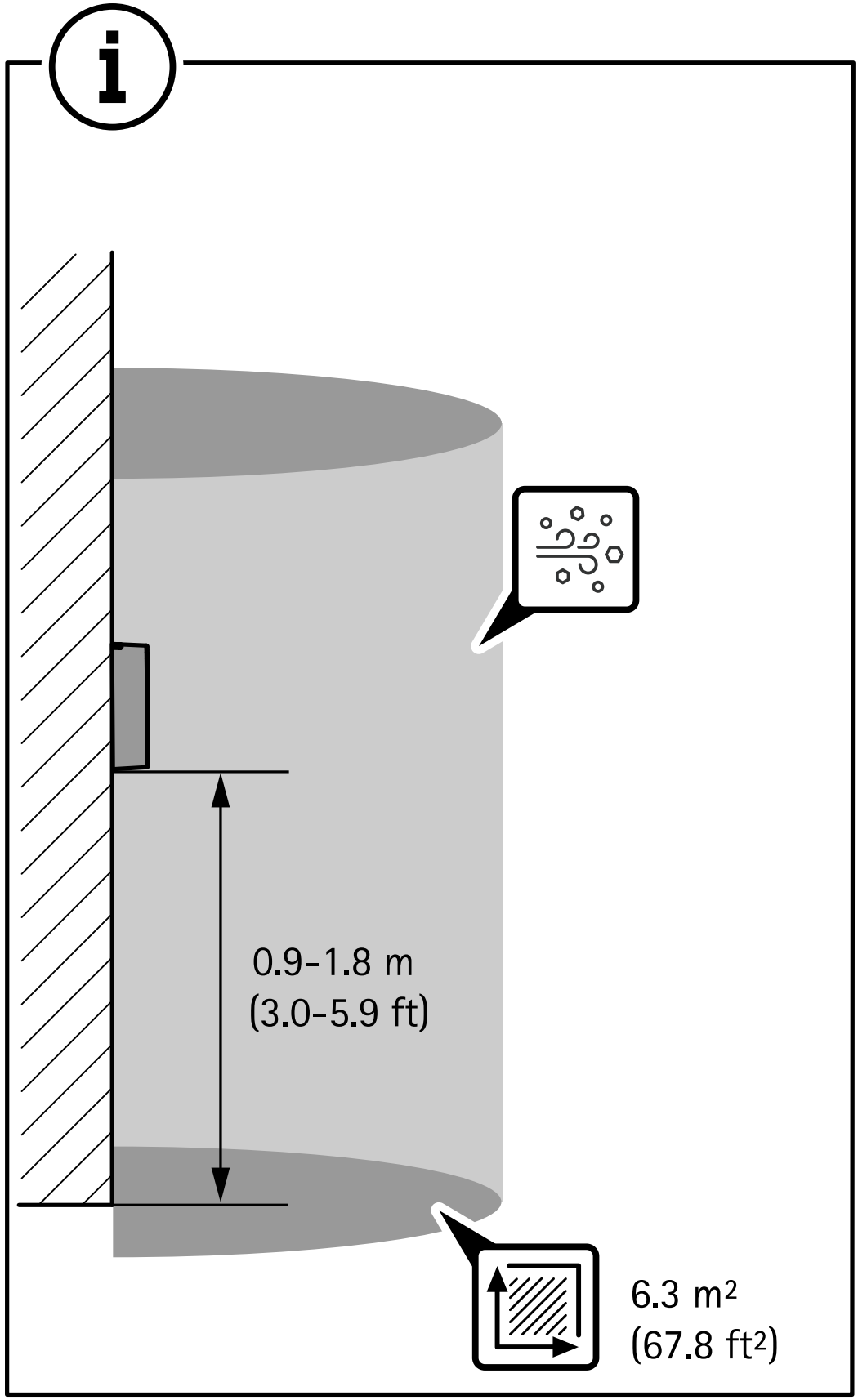
0.9–1.8 m
(3.0–5.9 ft)
6.3 m²
(67.8 ft²)

1.1

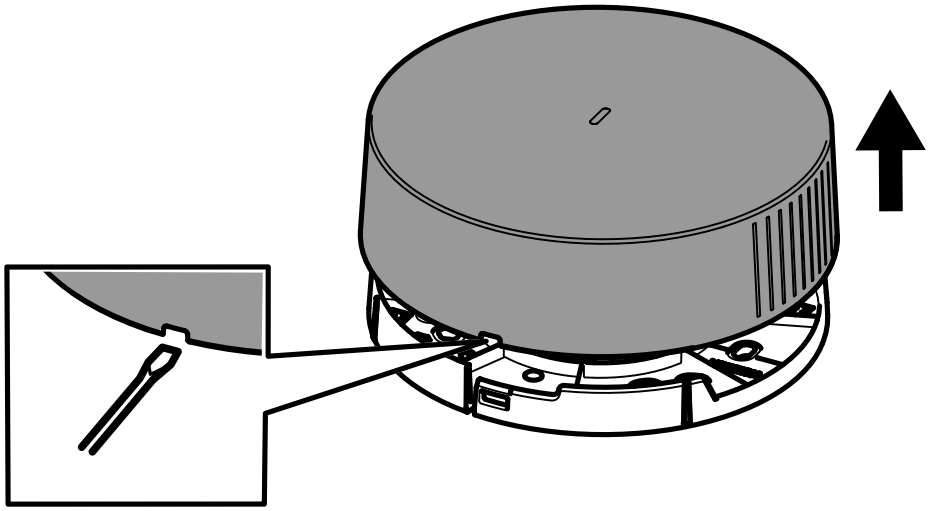

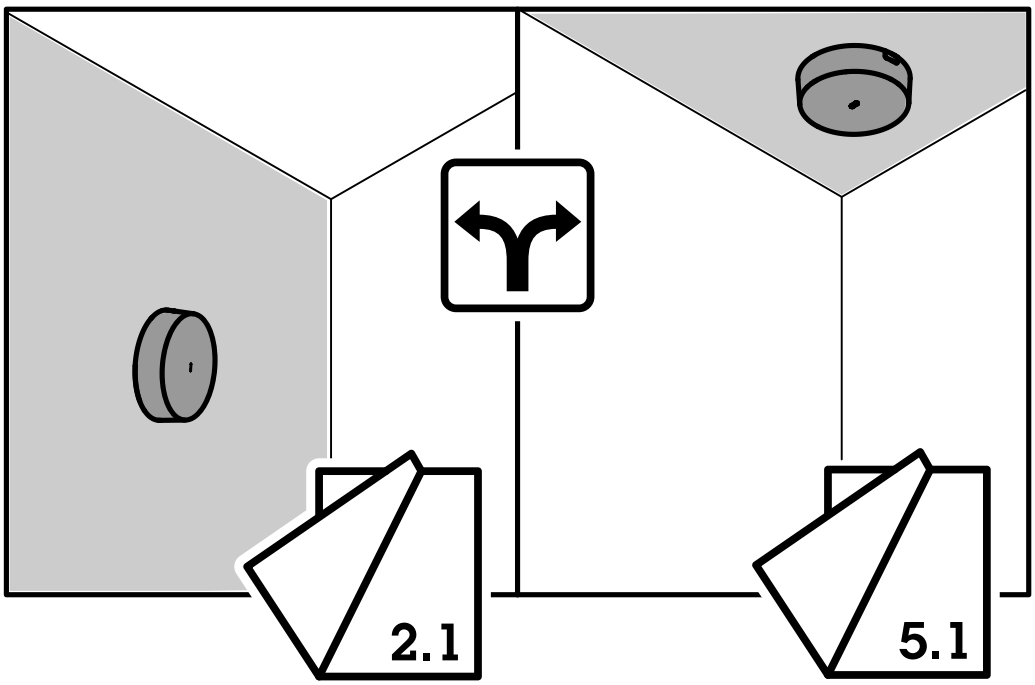

2.1

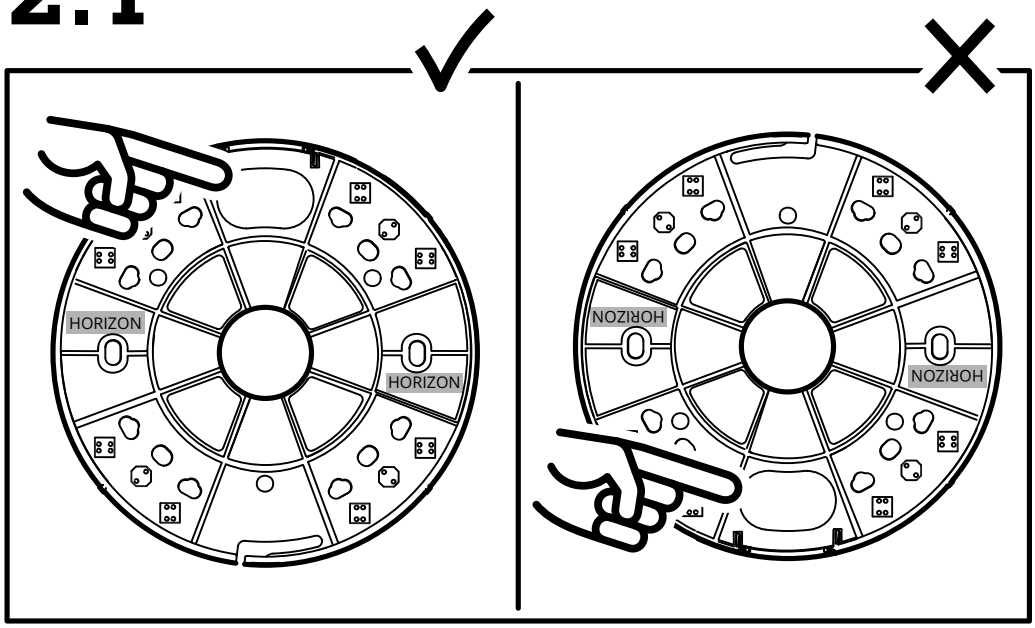

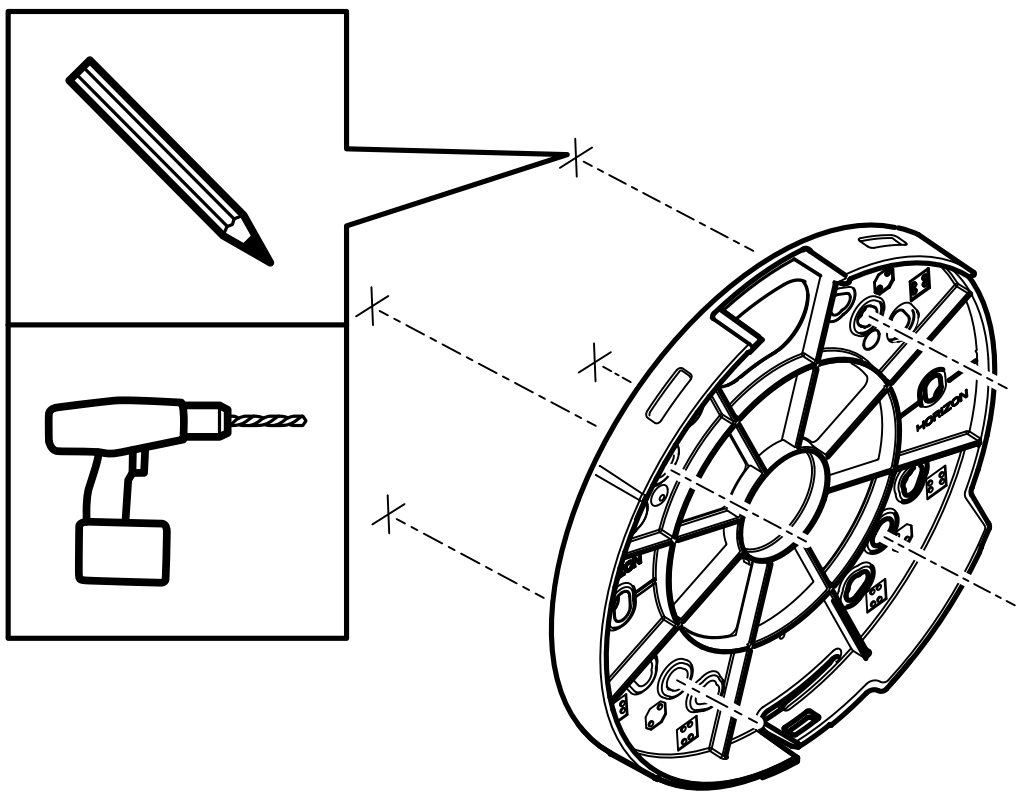

2.2

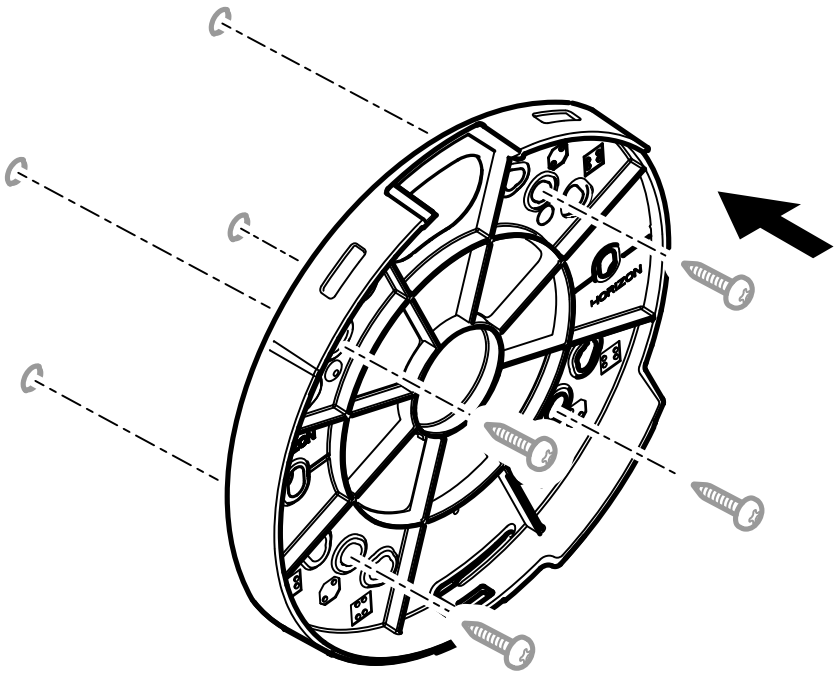

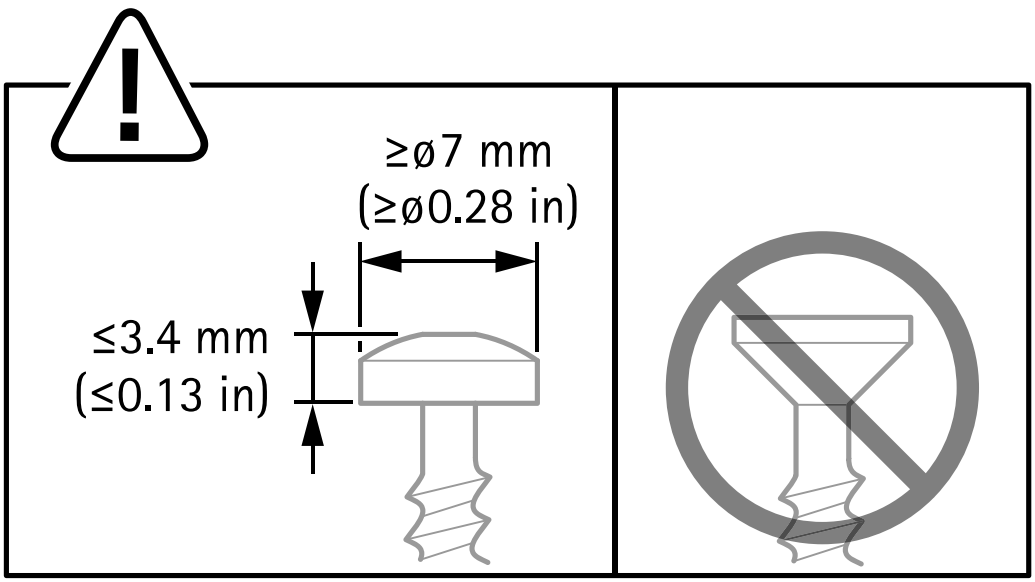

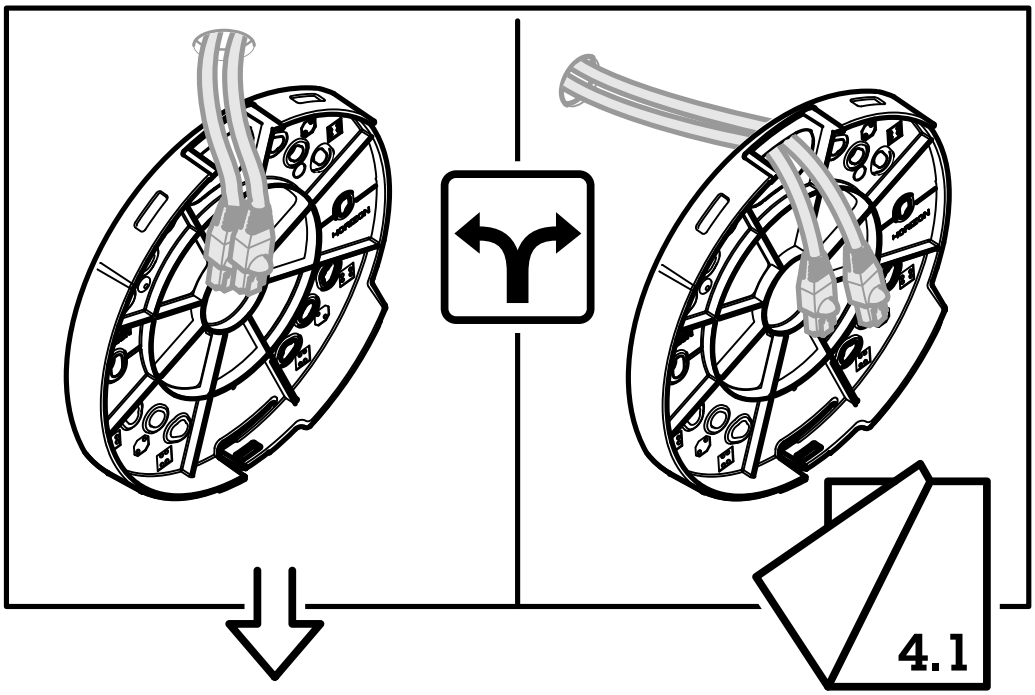

3.1

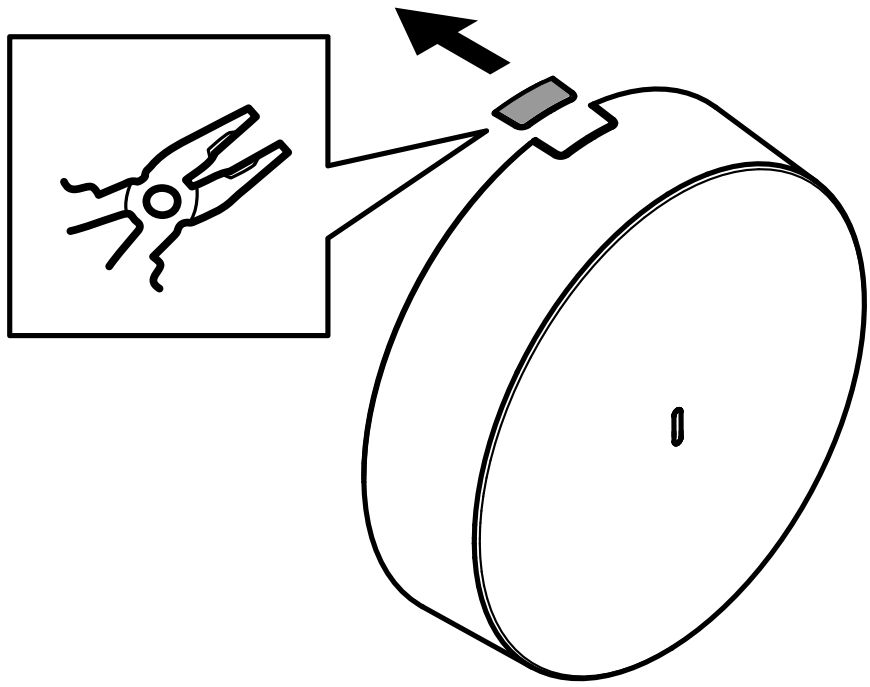

3.2

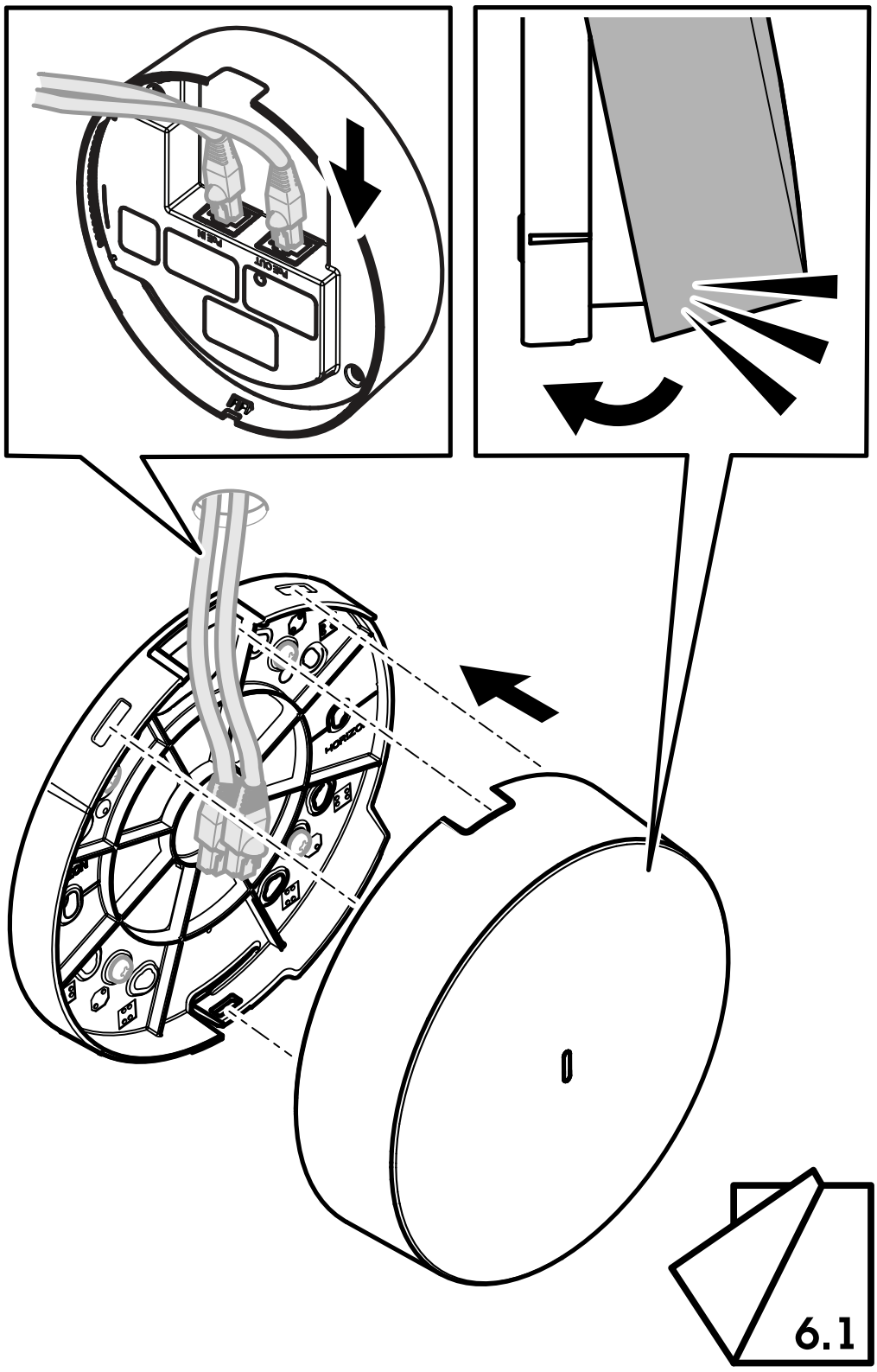

4.1

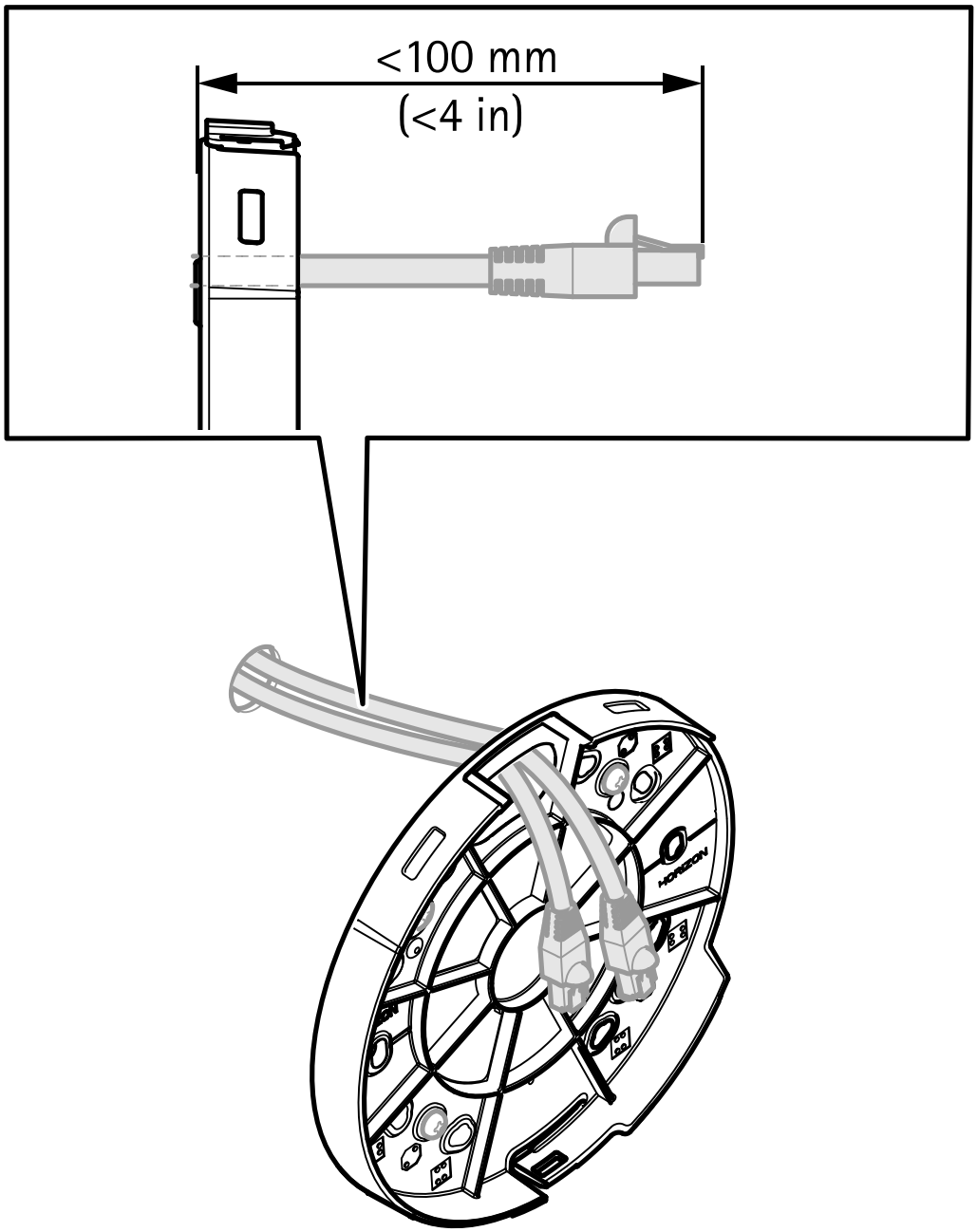

4.2

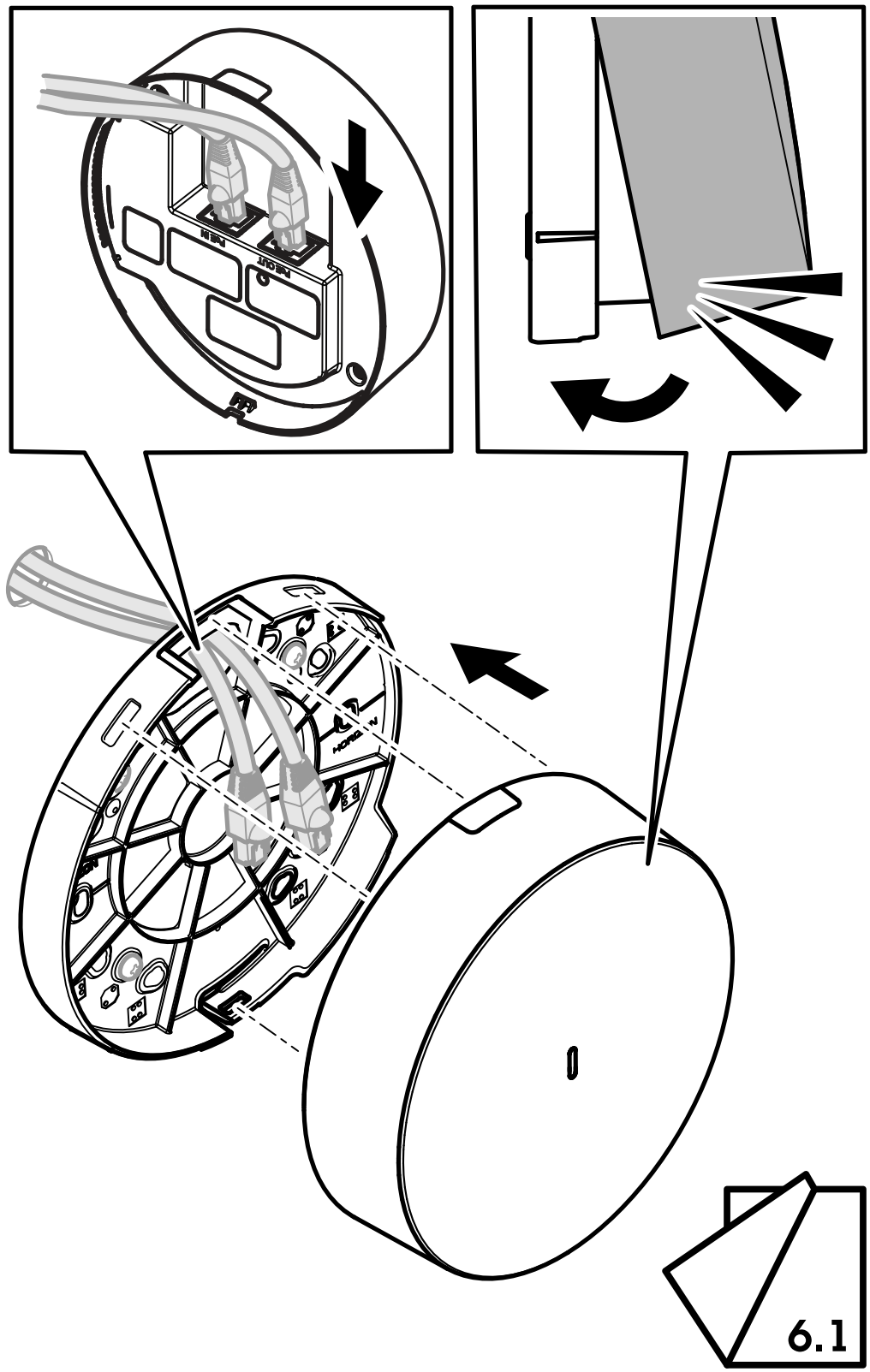

5.1

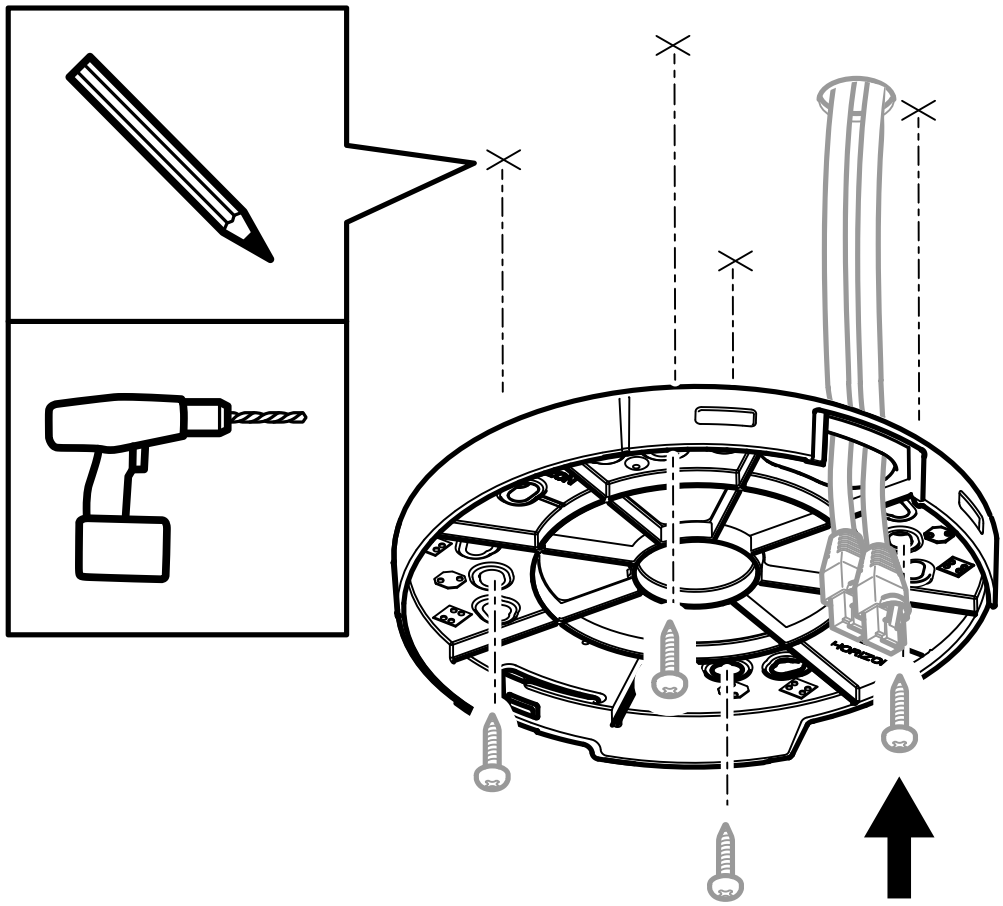

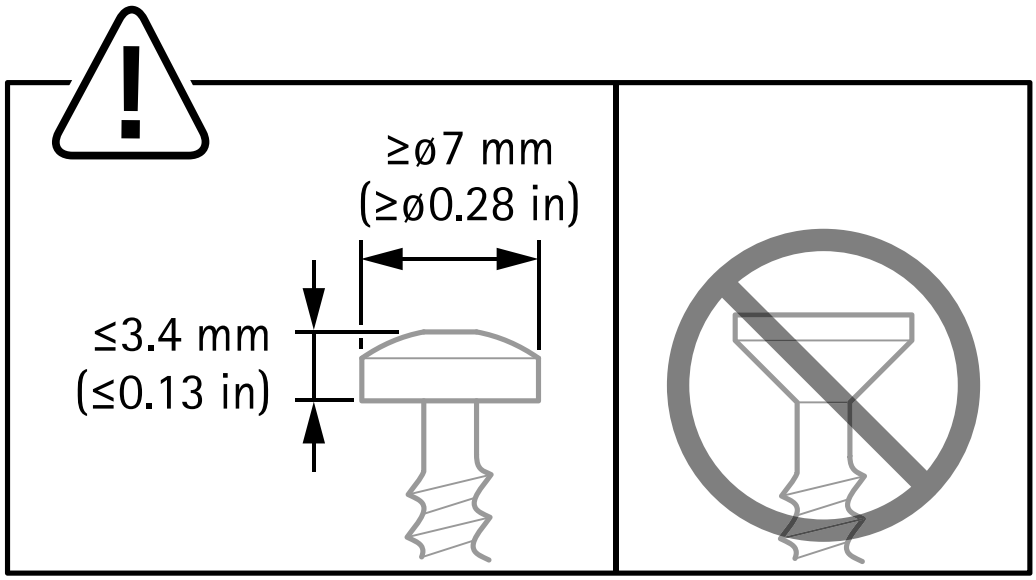

5.2

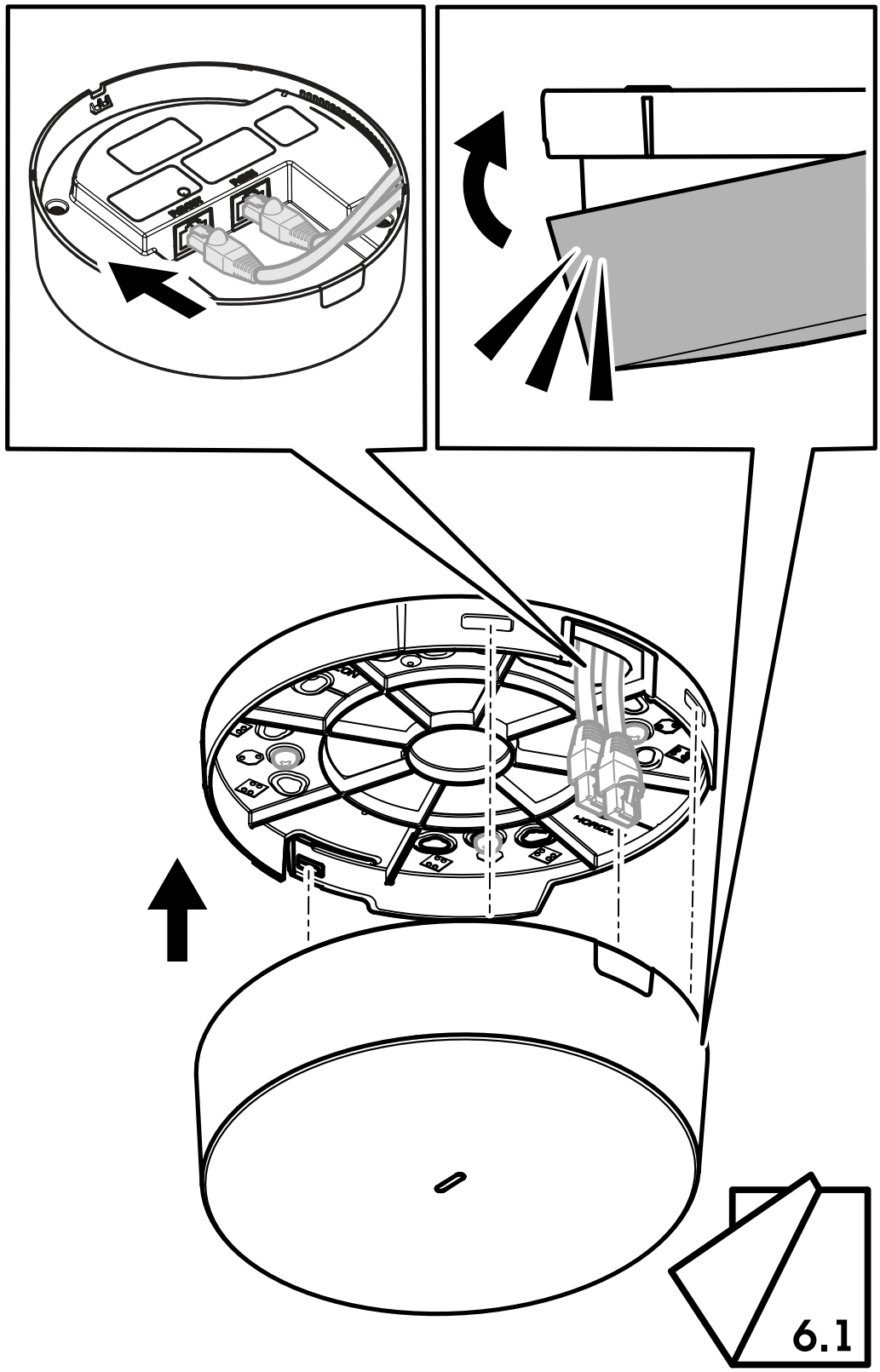

6.1

help.axis.com

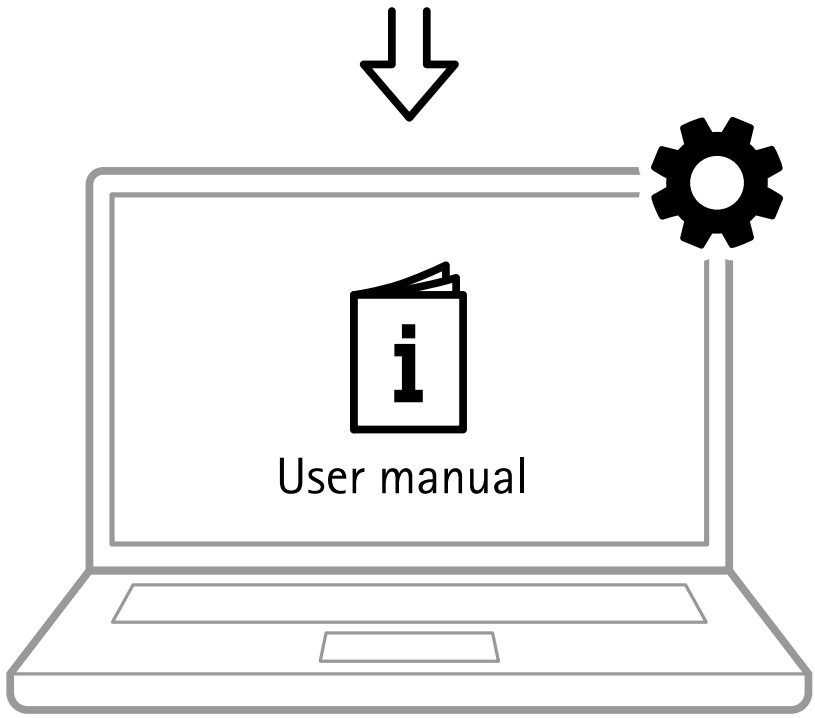



3283107

2026-11 (M4.5)

© 2024 – 2026 Axis Communications AB