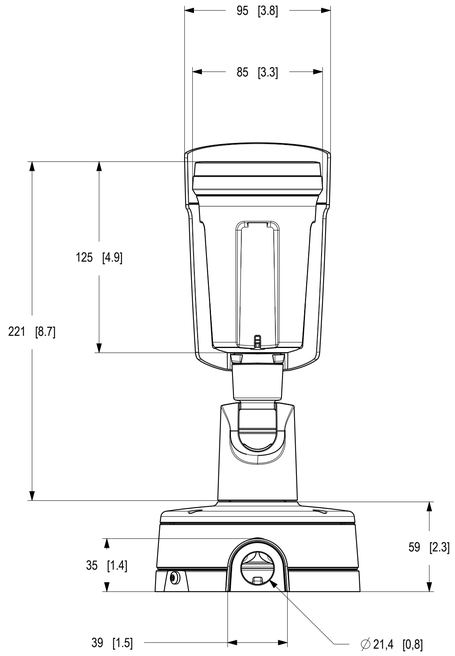

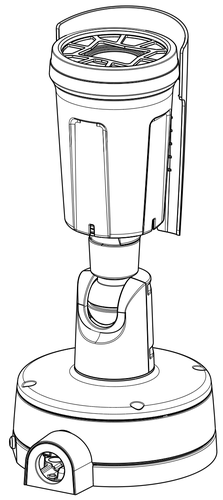

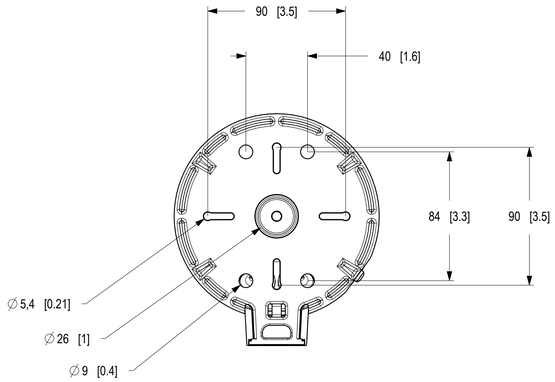

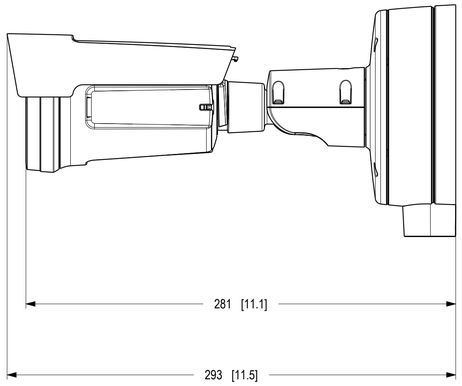

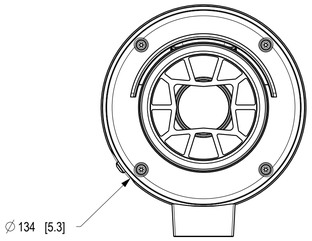

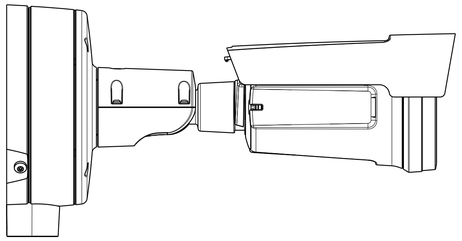

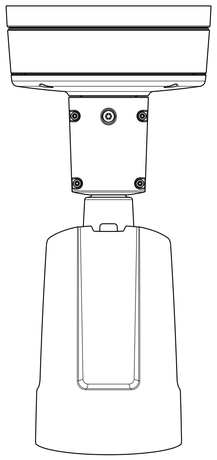

Dimensions in mm [inch]

Date	Version	Scale
2025 Dec-16	M1.1	1:2
Drawing Number	Size	Sheet
3490580	A1	1(1)

AXIS Q1961-XTE Panoramic Camera

© 2025 Axis Communications AB. All rights reserved.