AXIS P1487–LE Bullet Camera

5 MP fully featured AI-powered surveillance

This robust, impact-resistant camera delivers excellent image quality in 5 MP under any light conditions. It comes with a 3-8.5 mm wide-angle lens. Zipstream with support for AV1, H.264, and H.265 significantly lowers bandwidth and storage costs. Built on ARTPEC-9, it offers accelerated performance to run impressive analytics applications on the edge and comes with AXIS Object Analytics and AXIS Image Health Analytics preinstalled. This outdoor-ready camera can handle extreme temperatures. It's easy to install, maintain, and operate. What's more, Axis Edge Vault, our hardware-based cybersecurity platform, safeguards the device and offers FIPS 140-3 Level 3 certified secure key storage and operation.

- Excellent 5 MP video in any light
- Reduced storage cost with AV1 video encoding
- Next-generation AI-powered analytics
- Robust and impact-resistant
- Built-in cybersecurity with Axis Edge Vault

FIPS 140-3 Inside #5139

AXIS P1487–LE Bullet Camera

Camera

Image sensor
1/2.8" progressive scan RGB CMOS
Pixel size 2.0 µm

Lens
Varifocal, 3–8.5 mm, F1.36-2.58
Horizontal field of view 106˚-35˚
Vertical field of view 77˚-26˚
Minimum focus distance: 0.3 m (1 ft)
P-iris lens, IR corrected

Day and night
Automatic IR-cut filter
Hybrid IR filter

Minimum illumination
0 lux with IR illumination on
Color: 0.09 lux, at 50 IRE F1.3
B/W: 0.02 lux, at 50 IRE F1.3

Shutter speed
1/30500 s to 2 s

System on chip (SoC)

Model
ARTPEC-9

Memory
2 GB RAM, 8 GB Flash

Compute capabilities
Deep learning processing unit (DLPU)

Video

Video compression
H.264 (MPEG-4 Part 10/AVC) Baseline, Main and High Profiles
H.265 (MPEG-H Part 2/HEVC) Main Profile
AV1
Motion JPEG

Resolution
16:9: 2560x1440 to 640x360
16:10: 1920x1200 to 320x200
4:3: 2592x1944 to 160x120

Frame rate
Up to 25/30 fps (50/60 Hz) in all resolutions

Video streaming
Up to 20 unique and configurable video streams[1]
Axis Zipstream technology in H.264, H.265, and AV1
Controllable frame rate and bandwidth
VBR/ABR/MBR H.264/H.265/AV1
Low latency mode
Video streaming indicator

Signal-to-noise ratio
>55 dB

WDR
Forensic WDR: Up to 120 dB depending on scene

Multi-view streaming
Up to 7 individually cropped out view areas

Noise reduction
Spatial filter (2D noise reduction)
Temporal filter (3D noise reduction)

Image settings
Saturation, contrast, brightness, sharpness, white balance, day/night threshold, exposure mode, exposure zones, defogging, compression, orientation: auto, 0°, 90°, 180°, 270° including corridor format, mirroring of images, dynamic text and image overlay, polygon privacy masks, barrel distortion correction
Scene profiles: forensic, vivid, traffic overview
Electronic image stabilization

Image processing
Axis Zipstream, Forensic WDR, Lightfinder 2.0, OptimizedIR

Pan/Tilt/Zoom
Digital PTZ, digital zoom

1. *We recommend a maximum of 3 unique video streams per camera or channel, for optimized user experience, network bandwidth, and storage utilization. A unique video stream can be served to many video clients in the network using multicast or unicast transport method via built-in stream reuse functionality.*

Audio

Features
Automatic gain control (AGC)
Speaker pairing, microphone pairing

Streaming
Configurable duplex:
One-way (simplex, half duplex)
Two-way (half duplex, full duplex)

Input
10-band graphic equalizer
Input for external unbalanced microphone, optional 5 V microphone power
Digital input, optional 12 V ring power
Unbalanced line input

Output
Output through network speaker pairing

Encoding
24bit LPCM, AAC-LC 8/16/32/44.1/48 kHz, G.711 PCM 8 kHz, G.726 ADPCM 8 kHz, Opus 8/16/48 kHz
Configurable bit rate

Network

Network protocols
IPv4, IPv6 USGv6, ICMPv4/ICMPv6, HTTP, HTTPS[2], HTTP/2, TLS[2], QoS Layer 3 DiffServ, FTP, SFTP, CIFS/SMB, SMTP, mDNS (Bonjour), UPnP®, SNMP v1/v2c/v3 (MIB-II), DNS/DNSv6, DDNS, NTP, PTP, NTS, RTSP, RTP, SRTP/RTSPS, TCP, UDP, IGMPv1/v2/v3, RTCP, ICMP, DHCPv4/v6, ARP, SSH, LLDP, CDP, MQTT v3.1.1, Secure syslog (RFC 3164/5424, UDP/TCP/TLS), Link-Local address (ZeroConf)

System integration

Application Programming Interface
Open API for software integration, including VAPIX®, metadata and AXIS Camera Application Platform (ACAP); specifications at *axis.com/developer-community*.
One-click cloud connection
ONVIF® Profile G, ONVIF® Profile M, ONVIF® Profile S and ONVIF® Profile T, specification at *onvif.org*
Support for Voice over IP (VoIP) through the Session Initiation Protocol (SIP), using peer-to-peer (P2P) or Private Branch Exchange (PBX).

Video management systems
Compatible with AXIS Camera Station Edge, AXIS Camera Station Pro, and video management software from Axis' partners available at *axis.com/vms*.

Onscreen controls
Autofocus
Day/night shift
Defogging
Video streaming indicator
Wide dynamic range
IR illumination
Privacy masks
Media clip
Electronic image stabilization

Edge-to-edge
Microphone pairing
Speaker pairing
Siren and light pairing

Event conditions
Application
Device status: above operating temperature, above or below operating temperature, below operating temperature, within operating temperature, IP address removed, new IP address, network lost, system ready, ring power overcurrent protection, live stream active
Digital audio input status
Edge storage: recording ongoing, storage disruption, storage health issues detected
I/O: digital input, manual trigger, virtual input
MQTT: subscribe
Scheduled and recurring: schedule
Video: average bitrate degradation, day-night mode, tampering

Event actions
Audio clips: play, stop
Day-night mode
I/O: toggle I/O once, toggle I/O while the rule is active
Illumination: use lights, use lights while the rule is active
MQTT: publish
Notification: HTTP, HTTPS, TCP and email
Overlay text
Recordings: SD card and network share
SNMP traps: send, send while the rule is active
Upload of images or video clips: FTP, SFTP, HTTP, HTTPS, network share and email
WDR mode

Built-in installation aids
Pixel counter, remote zoom and focus, straighten image, auto rotation

2. *This product includes software developed by the OpenSSL Project for use in the OpenSSL Toolkit. (openssl.org), and cryptographic software written by Eric Young (eay@cryptsoft.com).*

Analytics

Applications
Included
AXIS Object Analytics, AXIS Scene Metadata, AXIS Image Health Analytics, AXIS Live Privacy Shield, AXIS Video Motion Detection
Supported
AXIS Perimeter Defender, AXIS License Plate Verifier
Support for AXIS Camera Application Platform enabling installation of third-party applications, see *axis.com/acap*

AXIS Object Analytics
Object classes: humans, vehicles (types: cars, buses, trucks, bikes, other)
Scenarios: line crossing, object in area, time in area, crossline counting, occupancy in area, tailgating detection, PPE monitoring[BETA], motion in area, motion line crossing
Up to 10 scenarios
Other features: triggered objects visualized with trajectories, color-coded bounding boxes and tables
Polygon include/exclude areas
Perspective configuration
ONVIF Motion Alarm event

AXIS Image Health Analytics
Detection settings:
Tampering: blocked image, redirected image
Image degradation: blurred image, underexposed image
Other features: sensitivity, validation period

AXIS Scene Metadata
Object classes: humans, faces, vehicles (types: cars, buses, trucks, bikes), license plates
Object attributes: Vehicle color, upper/lower clothing color, confidence, position

AXIS Live Privacy Shield
Object classes: Humans, (entire body or face only), license plates, backgrounds
Masking type: Pixelated with adjustable block size, color (solid), masking inclusion and exclusion areas
Other features: Dynamic masking up to 10 fps.
Supports multiple dynamically masked streams, and one unmasked stream with full frame rate, simultaneously.

Approvals

Product markings
CSA, UL/cUL, CE, KC, VCCI, RCM

Supply chain
TAA compliant

EMC
CISPR 35, CISPR 32 Class A, EN 55035, EN 55032 Class A, EN 50121-4, EN 61000-3-2, EN 61000-3-3, EN 61000-6-1, EN 61000-6-2
Australia/New Zealand: RCM AS/NZS CISPR 32 Class A
Canada: ICES-3(A)/NMB-3(A)
Japan: VCCI Class A
Korea: KS C 9835, KS C 9832 Class A
USA: FCC Part 15 Subpart B Class A
Railway: IEC 62236-4

Safety
CAN/CSA C22.2 No. 62368-1 ed. 3, IEC/EN/UL 62368-1 ed. 3, IEC/EN 62471 risk group exempt, IS 13252

Environment
IEC 60068-2-1, IEC 60068-2-2, IEC 60068-2-6, IEC 60068-2-14, IEC 60068-2-27, IEC/EN 60529 IP66/IP67, IEC/EN 62262, IEC 60950-22, ISO 21207 (Method B), ISTA 3A, IK10, NEMA TS 2 (2.2.7-2.2.9)

Network
IPv6 USGv6, NIST SP500-267

Cybersecurity
ETSI EN 303 645, BSI IT Security Label, FIPS-140

Cybersecurity

Edge security
Software: Signed OS, brute force delay protection, digest authentication and OAuth 2.0 RFC6749 OpenID Authorization Code Flow for centralized ADFS account management, password protection, Axis Cryptographic Module (FIPS 140-2 level 1)
Hardware: Axis Edge Vault cybersecurity platform
Secure keystore: secure element (CC EAL 6+, FIPS 140-3 Level 3), system-on-chip security (TEE)
Axis device ID, signed video, secure boot, encrypted filesystem (AES-XTS-Plain64 256bit)

Network security
IEEE 802.1X (EAP-TLS, PEAP-MSCHAPv2)[3], IEEE 802.1AE (MACsec PSK/EAP-TLS), IEEE 802.1AR, HTTPS/HSTS[3], TLS v1.2/v1.3[3], Network Time Security (NTS), X.509 Certificate PKI, host-based firewall

3. *This product includes software developed by the OpenSSL Project for use in the OpenSSL Toolkit. (openssl.org), and cryptographic software written by Eric Young (eay@cryptsoft.com).*

Documentation
AXIS OS Hardening Guide
Axis Vulnerability Management Policy
Axis Security Development Model
AXIS OS Software Bill of Material (SBOM)
To download documents, go to *axis.com/support/cybersecurity/resources*
To read more about Axis cybersecurity support, go to *axis.com/cybersecurity*

Power

Power over Ethernet input
Power over Ethernet IEEE 802.3af/802.3at Type 1
Class 3

DC input
10–28 VDC, max 12.95 W

Power consumption
Max 12.95 W, typical (heater off, IR off) 4.63 W

Features
Dynamic power mode, power meter

General

Casing
IP66/IP67-, NEMA 4X-, and IK10-rated casing
Polycarbonate blend and aluminium
Color: white NCS S 1002-B
For repainting instructions, go to the product's support page. For information about the impact on warranty, go to *axis.com/warranty-implication-when-repainting*.

Connectors
Network: Shielded RJ45 10BASE-T/100BASE-TX/1000BASE-T
Audio: 3.5 mm mic/line in
I/O: Terminal block for 1 supervised alarm input and 1 output (12 V DC output, max. load 25 mA)
Power: DC input

IR illumination
OptimizedIR with power-efficient, long-life 850 nm IR LEDs
Range of reach 50 m (164 ft) or more depending on the scene

Storage
Support for microSD/microSDHC/microSDXC card
Support for SD card encryption (AES-XTS-Plain64 256bit)
Recording to network-attached storage (NAS)
For SD card and NAS recommendations see *axis.com*

Operating conditions
Temperature: -40 °C to 60 °C (-40 °F to 140 °F)
Maximum temperature according to NEMA TS2 (2.2.7): 74 °C (165 °F)
Start-up temperature: -40 °C
Humidity 10–100% RH (condensing)
Wind load (sustained): 60 m/s (134 mph)

Storage conditions
-40 °C to 65 °C (-40 °F to 149 °F)
Humidity 5-95% RH (non-condensing)

Dimensions
For the overall product dimensions, see the dimension drawing in this datasheet.
Effective Projected Area (EPA): 0.024 m^2 (0.26 ft^2)

Weight
With weather shield: 1.37 kg (3 lb)

Box content
Camera, weathershield, installation guide, terminal block connector, connector guard, cable gaskets, owner authentication key

System tools
AXIS Site Designer, AXIS Device Manager, product selector, accessory selector, lens calculator
Available at *axis.com*

Languages
English, German, French, Spanish, Italian, Russian, Simplified Chinese, Japanese, Korean, Portuguese, Polish, Traditional Chinese, Dutch, Czech, Swedish, Finnish, Turkish, Thai, Vietnamese

Warranty
5-year warranty, see *axis.com/warranty*

Part numbers
Available at *axis.com/products/axis-p1487-le#part-numbers*

Optional accessories

Installation
AXIS T8415 Wireless Installation Tool

Mounting
AXIS T91B47 Pole Mount, AXIS T94F01P Conduit Back Box, AXIS TM4101 Pendant Kit

Storage
AXIS Surveillance Cards

For more accessories, go to *axis.com/products/axis-p1487-le#accessories*

Sustainability

Substance control
PVC free, BFR/CFR free in accordance with JEDEC/ECA Standard JS709
RoHS in accordance with EU RoHS Directive 2011/65/EU/ and EN 63000:2018
REACH in accordance with (EC) No 1907/2006. For SCIP UUID, see *axis.com/partner.*

Materials
Screened for conflict minerals in accordance with OECD guidelines
To read more about sustainability at Axis, go to *axis.com/about-axis/sustainability*

Environmental responsibility
axis.com/environmental-responsibility
Axis Communications is a signatory of the UN Global Compact, read more at *unglobalcompact.org*

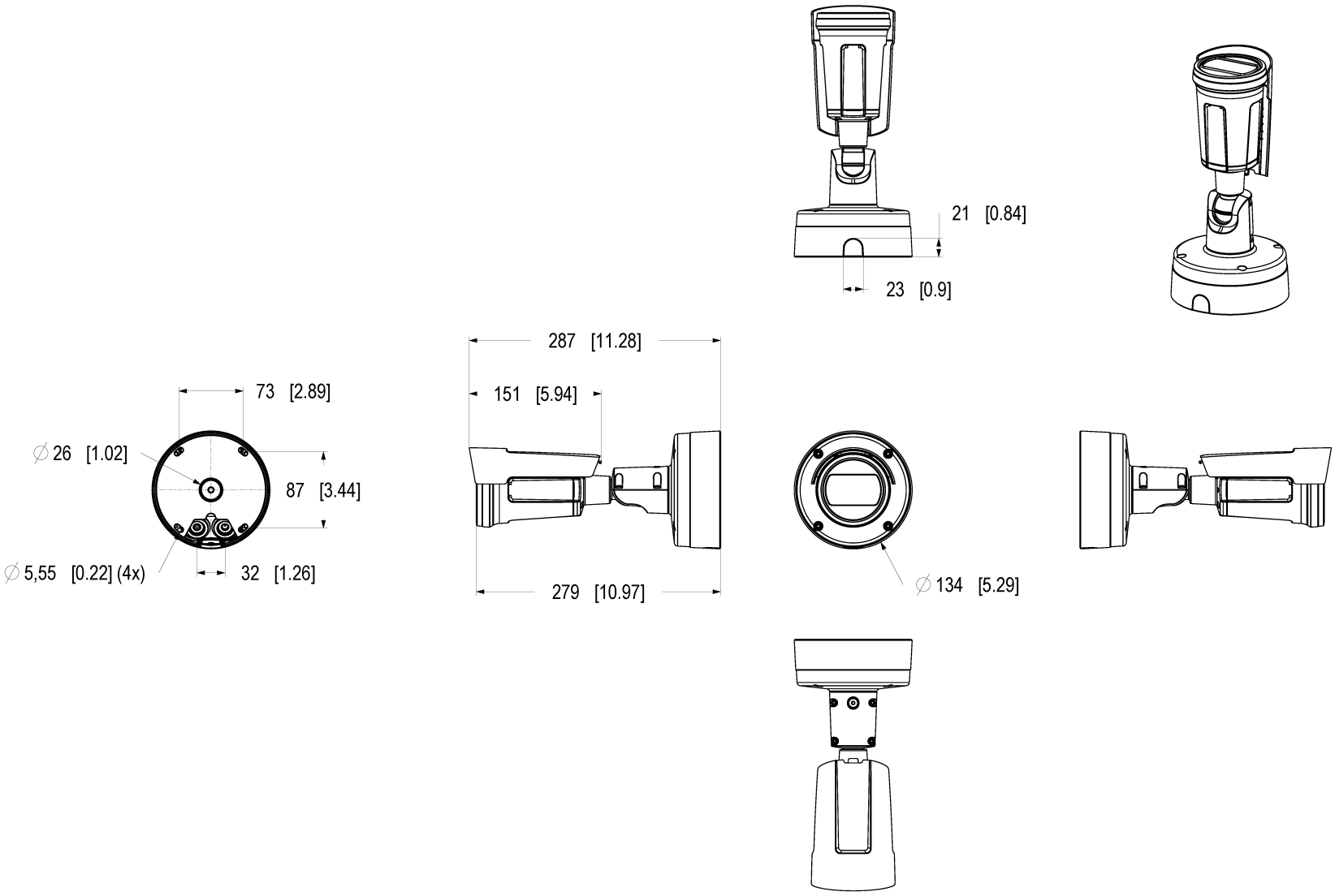

Dimensions in mm [inch]

Date	Version	Scale
2025 Jun-17	M1.1	1:3
Drawing Number	Size	Sheet
3373362	A2	1(2)

AXIS P1487-LE Bullet Camera

© 2025 Axis Communications AB. All rights reserved.

Weather Shield sliding direction: 15.5 mm [6.10]

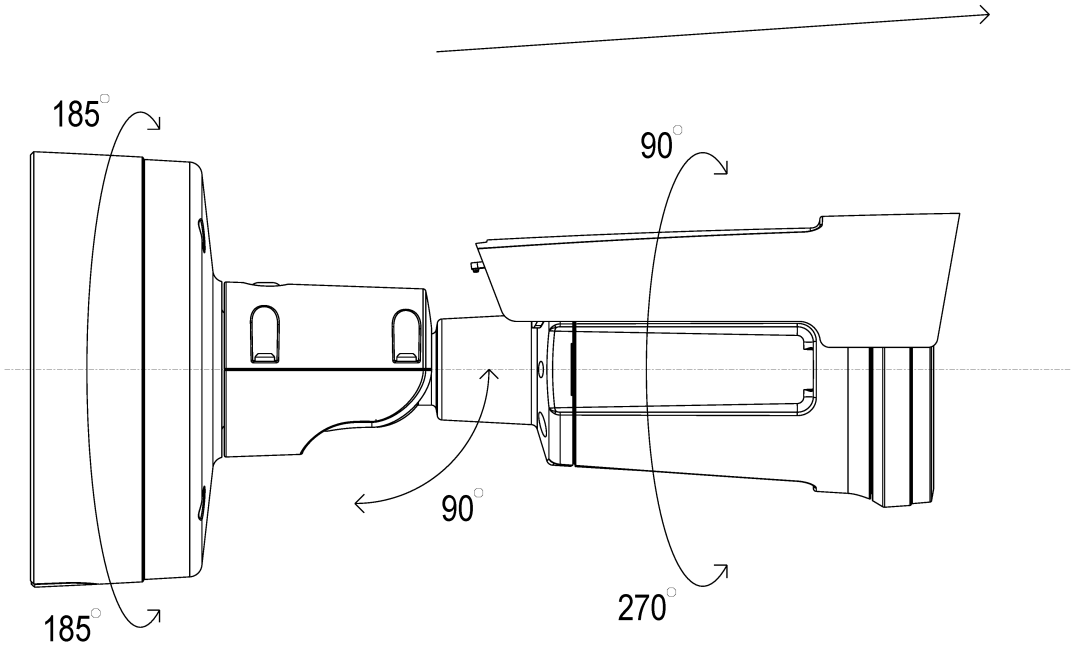

AXIS P1487-LE Bullet Camera

Dimensions in mm [inch]

Date	Version	Scale
2025 Jun-17	M1.1	1:1
Drawing Number	Size	Sheet
3373362	A2	2(2)

© 2025 Axis Communications AB. All rights reserved.

AV1

AV1 is a modern video encoding standard optimized for video transmission over the internet by Alliance for Open Media (AoM). It was designed to provide better compression efficiency than older codecs including H.264 (also known as AVC) and H.265 (HEVC), while being royalty-free and open-source.

Axis Edge Vault

Axis Edge Vault is the hardware-based cybersecurity platform that safeguards the Axis device. It forms the foundation that all secure operations depend on and offer features to protect the device's identity, safeguard its integrity and protect sensitive information from unauthorized access. For instance, **secure boot** ensures that a device can boot only with **signed OS**, which prevents physical supply chain tampering. With signed OS, the device is also able to validate new device software before accepting to install it. And the **secure keystore** is the critical building-block for protecting cryptographic information used for secure communication (IEEE 802.1X, HTTPS, Axis device ID, access control keys etc.) against malicious extraction in the event of a security breach. The secure keystore and secure connections are provided through a Common Criteria or FIPS 140 certified hardware-based cryptographic computing module.

Furthermore, signed video ensures that video evidence can be verified as untampered. Each camera uses its unique video signing key, which is securely stored in the secure keystore, to add a signature into the video stream allowing video to be traced back to the Axis camera from where it originated.

To read more about Axis Edge Vault, go to *axis. com/ solutions/edge-vault*.

AXIS Object Analytics

AXIS Object Analytics is a preinstalled, multifeatured video analytics that detects and classifies humans, vehicles, and types of vehicles. Thanks to AI-based algorithms and behavioral conditions, it analyzes the scene and their spatial behavior within – all tailored to your specific needs. Scalable and edge-based, it requires minimum effort to set up and supports various scenarios running simultaneously.

AXIS Live Privacy Shield

Remotely monitor activities both indoors and outdoors while safeguarding privacy in real-time.

With AI-based dynamic masking you can choose what to mask or blur while addressing rules and regulations protecting privacy and personal data. The application enables masking of moving and still objects such as humans, license plates, or backgrounds. The application works in real-time and on both live and recorded video streams.

Electronic image stabilization

Electronic image stabilization (EIS) provides smooth video in situations where a camera is subject to vibrations. Built-in gyroscopic sensors continuously detect the camera's movements and vibrations, and they automatically adjust the frame to ensure you always capture the details you need. Electronic image stabilization relies on different algorithms for modeling camera motion, which are used to correct the images.

© 2025 – 2026 Axis Communications AB. AXIS COMMUNICATIONS, AXIS, ARTPEC and VAPIX are registered trademarks of Axis AB in various jurisdictions. All other trademarks are the property of their respective owners. We reserve the right to introduce modifications without notice.