AXIS C1310-E Mk II Network Horn Speaker

Outdoor speaker for clear long-range speech

AXIS C1310-E Mk II Network Horn Speaker is perfect for outdoor environments in most climates. It allows users to remotely prevent unwanted activities, to deliver instructions during an emergency or to make general voice messages. Built-in memory supports pre-recorded messages, or security personal can respond to notifications with live speak. Open standards support easy integration with network video, access control, analytics, and VoIP (supporting SIP). Digital signal processing (DSP) ensures clear sound. The built-in microphone enables remote health testing and 2-way communication. Furthermore, the embedded audio management software supports user, content, zone, and scheduling management.

- All-in-one speaker system
- Connects to standard network
- Simple installation with PoE
- Remote health testing
- Scalable and easy to integrate

AXIS C1310-E Mk II Network Horn Speaker

Audio hardware

Enclosure
Re-entrant horn loudspeaker with compression driver

Max sound pressure level
>121 dB

Frequency response
280 Hz - 12.5 kHz

Coverage pattern
70° horizontal by 100° vertical (at 2 kHz)

Input/output
Built-in microphone (can be disabled mechanically)
Built-in speaker

Built-in microphone specification
50 Hz - 12 kHz

Amplifier description
Built-in 7 W Class D amplifier

Digital signal processing
Built-in and pre-configured

Audio management

AXIS Audio Manager Edge
Built in:
– Zone management allowing you to divide up to 200 speakers into 20 zones.
– Content management for music and live/pre-recorded announcements.
– Scheduling to decide when and where to play content.
– Content prioritization to ensure urgent messages interrupt the schedule.
– Health monitoring for remote discovery of system errors.
– User management to control who has access to what features.
For more details, see the datasheet on *axis.com/products/axis-audio-manager-edge/support*

AXIS Audio Manager Pro
For larger and more advanced systems. Sold separately. For specifications, see the datasheet on *axis.com/products/axis-audio-manager-pro/support*

AXIS Audio Manager Center
AXIS Audio Manager Center is a cloud service for remote access and management of multi-site systems. For specifications, see the datasheet on *axis.com/products/axis-audio-manager-center/support*

Audio software

Streaming
One-way/two-way with optional half-duplex echo cancellation. Mono.

Encoding
AAC LC 8/16/32/48 kHz, G.711 PCM 8 kHz, G.726 ADPCM 8 kHz, Axis μ-law 16 kHz, WAV,
MP3 in mono/stereo from 64 kbps to 320 kbps.
Constant and variable bit rate.
Sampling rate from 8 kHz up to 48 kHz.

System integration

Application Programming Interface
Open API for software integration, including VAPIX®, One-click cloud connection, AXIS Camera Application Platform (ACAP).

Video management systems
Compatible with AXIS Camera Station Edge, AXIS Camera Station Pro, and video management software from Axis' partners available at *axis.com/vms*.

Mass notification
Singlewire InformaCast®, Intrado Revolution, Lynx, Alertus

Unified communication
Verified compatibility:
SIP clients: 2N, Yealink, Cisco, Linphone, Grandstream
PBX/SIP servers: Cisco Call Manager, Cisco BroadWorks, Avaya, Asterix, Grandstream
Cloud service providers: Webex, Zoom

SIP
Supported SIP features: Secondary SIP server, IPv6, SRTP, SIPS, SIP TLS, DTMF (RFC2976 and RFC2833), NAT (ICE, STUN, TURN)
RFC 3261: INVITE, CANCEL, BYE, REGISTER, OPTIONS, INFO
DTMF (RFC 4733/RFC 2833)

Event conditions
Audio: audio clip playing, speaker test result
Call: state, state change
Device status: IP address blocked/removed, live stream active, network lost, new IP address, system ready
Edge storage: recording ongoing, storage disruption, storage health issues detected
I/O: digital input, manual trigger, virtual input
MQTT: subscribe
Scheduled and recurring: schedule

Event actions
Audio: run automatic speaker test
Audio clips: play, stop
I/O: toggle I/O
Light and siren: run, stop
MQTT: publish
Notification: HTTP, HTTPS, TCP and email
Recordings: record audio
SNMP trap messages: send message
Status LED: flash

Built-in installation aids
Test tone verification and identification

Functional monitoring
Auto Speaker Test (verification via built-in microphone)

Analytics

Applications
Included
AXIS Audio Analytics
Supported
Support for AXIS Camera Application Platform enabling installation of third-party applications, see *axis.com/acap*

AXIS Audio Analytics
Features: adaptive audio detection
Event metadata: audio detections

Approvals

Product markings
CSA, UL/cUL, UKCA, CE, KC, EAC, VCCI, RCM, BSMI

Supply chain
TAA compliant

EMC
EN 55035, EN 55032 Class B, EN 50121-4, EN 61000-6-1, EN 61000-6-2
Australia/New Zealand: RCM AS/NZS CISPR 32 Class B
Canada: ICES-3(B)/NMB-3(B)
Japan: VCCI Class B
Korea: KS C 9835, KS C 9832 Class B
USA: FCC Part 15 Subpart B Class B
Railway: IEC 62236-4

Safety
CAN/CSA C22.2 No. 62368-1 ed. 3, IEC/EN/UL 62368-1 ed. 3

Environment
IEC 60068-2-1, IEC 60068-2-2, IEC 60068-2-6, IEC 60068-2-14, IEC 60068-2-27, IEC 60068-2-78, IEC/EN 60529 IP66, NEMA 250 Type 4X, MIL-STD-810G 509.5, MIL-STD-810H 509.7

Cybersecurity
ETSI EN 303 645, BSI IT Security Label, FIPS-140

Network

Network protocols
IPv4/v6[1], HTTP, HTTPS[2], SSL/TLS[2], QoS Layer 3 DiffServ, FTP, SFTP, CIFS/SMB, SMTP, Bonjour, UPnP™, SNMP v1/v2c/v3 (MIB-II), DNS, DynDNS, NTP, PTP, RTSP, RTP, TCP, UDP, IGMPv1/v2/v3, RTCP, ICMP, DHCP, ARP, LLDP, CDP, SOCKS, SSH, NTCIP, SIP

Cybersecurity

Edge security
Software: Signed OS, brute force delay protection, digest authentication, password protection, Axis Cryptographic Module (FIPS 140-2 level 1)
Hardware: Axis Edge Vault cybersecurity platform Secure element (CC EAL 6+), Axis device ID, secure keystore, secure boot

1. *Audio synchronization with IPv4 only.*
2. *This product includes software developed by the OpenSSL Project for use in the OpenSSL Toolkit. (openssl.org), and cryptographic software written by Eric Young (eay@cryptsoft.com).*

Network security
IEEE 802.1X (EAP-TLS)[3],
IEEE 802.1AE (MACsec PSK/EAP-TLS), IEEE 802.1AR, HTTPS/HSTS[3], TLS v1.2/v1.3[3], Network Time Security (NTS), X.509 Certificate PKI, host-based firewall

Documentation
AXIS OS Hardening Guide
Axis Vulnerability Management Policy
Axis Security Development Model
AXIS OS Software Bill of Material (SBOM)
To download documents, go to *axis.com/support/cybersecurity/resources*
To read more about Axis cybersecurity support, go to *axis.com/cybersecurity*

System on chip (SoC)

Model
NXP i.MX 8M Nano

Memory
1024 MB RAM, 1024 MB Flash

General

Casing
IP66- and NEMA 4X-rated
Aluminum back can and stainless steel bracket
Color: white RAL 9010

Power
Power over Ethernet (PoE) IEEE 802.3af/802.3at Type 1 Class 3
Typical 2 W, max 12.95 W

Connectors
Network: RJ45 10BASE-T/100BASE-TX PoE
I/O: 4-pin 2.5 mm terminal block for 2x supervised configurable I/Os

LED indicators
Status LED, front-facing LED

Reliability
Designed for 24/7 operation.

Operating conditions
Temperature: -40 °C to 60 °C (-40 °F to 140 °F)
Humidity: 10-100% RH (condensing)

Storage conditions
Temperature: -40 °C to 65 °C (-40 °F to 149 °F)
Humidity: 5–95% RH (non-condensing)

Dimensions
For the overall product dimensions, see the dimension drawing in this datasheet.

Weight
1.3 kg (2.9 lb.)

Box content
Horn speaker, installation guide, terminal block connector, connector guard, cable gasket, ring terminal, owner authentication key

Optional accessories
AXIS T91B47 Pole Mount, AXIS T91F67 Pole Mount, Cable Gland M20x1.5, RJ45, Cable Gland A M20, AXIS Power over Ethernet Midspans, T94R01B Corner Bracket, T94P01B Corner Bracket, T94S01P Conduit Back Box
For more accessories, go to *axis.com/products/axis-c1310-e-mk-ii#accessories*

Languages
English, German, French, Spanish, Italian, Russian, Simplified Chinese, Japanese, Korean, Portuguese, Polish, Traditional Chinese, Dutch, Czech, Swedish, Finnish, Turkish, Thai, Vietnamese

Warranty
5-year warranty, see *axis.com/warranty*

Part numbers
Available at *axis.com/products/axis-c1310-e-mk-ii#part-numbers*

Sustainability

Substance control
PVC free in accordance with JEDEC/ECA Standard JS709
RoHS in accordance with EU RoHS Directive 2011/65/EU/ and EN 63000:2018
REACH in accordance with (EC) No 1907/2006. For SCIP UUID, see *echa.europa.eu*

Materials
Screened for conflict minerals in accordance with OECD guidelines
To read more about sustainability at Axis, go to *axis.com/about-axis/sustainability*

3. *This product includes software developed by the OpenSSL Project for use in the OpenSSL Toolkit. (openssl.org), and cryptographic software written by Eric Young (eay@cryptsoft.com).*

Environmental responsibility
axis.com/environmental-responsibility
Axis Communications is a signatory of the UN Global Compact, read more at *unglobalcompact.org*

Dimension drawing

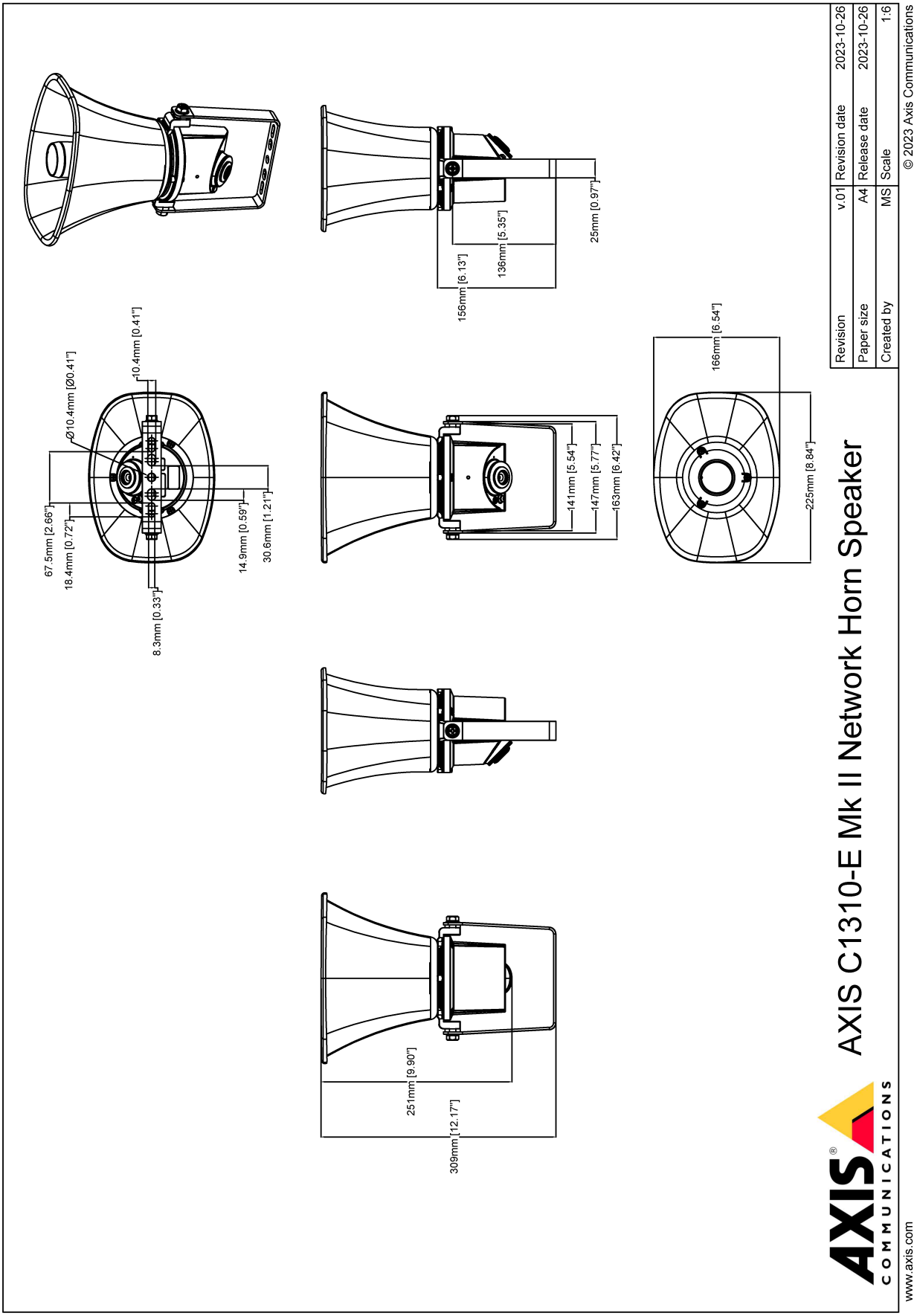

Highlighted capabilities

Axis Edge Vault

Axis Edge Vault is the hardware-based cybersecurity platform that safeguards the Axis device. It forms the foundation that all secure operations depend on and offer features to protect the device's identity, safeguard its integrity and protect sensitive information from unauthorized access. For instance, **secure boot** ensures that a device can boot only with **signed OS**, which prevents physical supply chain tampering. With signed OS, the device is also able to validate new device software before accepting to install it. And the **secure keystore** is the critical building-block for protecting cryptographic information used for secure communication (IEEE 802.1X, HTTPS, Axis device ID, access control keys etc.) against malicious extraction in the event of a security breach. The secure keystore and secure connections are provided through a Common Criteria or FIPS 140 certified hardware-based cryptographic computing module.

To read more about Axis Edge Vault, go to *axis. com/ solutions/edge-vault*.

For more information, see *axis.com/glossary*

© 2023 – 2026 Axis Communications AB. AXIS COMMUNICATIONS, AXIS, ARTPEC and VAPIX are registered trademarks of Axis AB in various jurisdictions. All other trademarks are the property of their respective owners. We reserve the right to introduce modifications without notice.