AXIS T6112 Audio and I/O interface

Installation Guide

Read this first

Read through this Installation Guide carefully before installing the product. Keep the Installation Guide for future reference.

Legal considerations

Video and audio surveillance can be regulated by laws that vary from country to country. Check the laws in your local region before using this product for surveillance purposes.

Liability

Every care has been taken in the preparation of this document. Please inform your local Axis office of any inaccuracies or omissions. Axis Communications AB cannot be held responsible for any technical or typographical errors and reserves the right to make changes to the product and manuals without prior notice. Axis Communications AB makes no warranty of any kind with regard to the material contained within this document, including, but not limited to, the implied warranties of merchantability and fitness for a particular purpose. Axis Communications AB shall not be liable nor responsible for incidental or consequential damages in connection with the furnishing, performance or use of this material. This product is only to be used for its intended purpose.

Intellectual property rights

Axis AB has intellectual property rights relating to technology embodied in the product described in this document. In particular, and without limitation, these intellectual property rights may include one or more of the patents listed at *axis.com/patent* and one or more additional patents or pending patent applications in the US and other countries.

Equipment modifications

This equipment must be installed and used in strict accordance with the instructions given in the user documentation. This equipment contains no user-serviceable components. Unauthorized equipment changes or modifications will invalidate all applicable regulatory certifications and approvals.

Trademark acknowledgements

AXIS COMMUNICATIONS, AXIS and VAPIX are registered trademarks or trademark applications of Axis AB in various jurisdictions. All other company names and products are trademarks or registered trademarks of their respective companies.

Regulatory information

Europe

CE

This product complies with the applicable CE marking directives and harmonized standards:

- Electromagnetic Compatibility (EMC) Directive 2014/30/EU. See *Electromagnetic compatibility (EMC) on page 2* .
- Low Voltage Directive (LVD) 2014/35/EU. See *Safety on page 3* .
- Restriction of Hazardous Substances (RoHS) Directive 2011/65/EU, including any amendments, updates or replacements. See *Disposal and recycling on page 3* .

A copy of the original declaration of conformity may be obtained from Axis Communications AB. See *Contact information on page 3* .

Electromagnetic compatibility (EMC)

This equipment has been designed and tested to fulfill applicable standards for:

- Radio frequency emission when installed according to the instructions and used in its intended environment.
- Immunity to electrical and electromagnetic phenomena when installed according to the instructions and used in its intended environment.

USA

This device complies with part 15 of the FCC Rules. Operation is subject to the following two conditions:

1. This device may not cause harmful interference, and
2. this device must accept any interference received, including interference that may cause undesired operation.

This equipment has been tested using a shielded network cable (STP) and found to comply with the limits for a Class B digital device, pursuant to part 15 of the FCC Rules. These limits are designed to provide reasonable protection against harmful interference in a residential installation. This equipment generates, uses and can radiate radio frequency energy and, if not installed and used in accordance with the instructions, may cause harmful interference to radio communications. However, there is no guarantee that interference will not occur in a particular installation. If this equipment does cause harmful interference to radio or television reception, which can be determined by turning the equipment off and on, the user is encouraged to try to correct the interference by one or more of the following measures:

- Reorient or relocate the receiving antenna.
- Increase the separation between the equipment and receiver.
- Connect the equipment into an outlet on a circuit different from that to which the receiver is connected.
- Consult the dealer or an experienced radio/TV technician for help.

The product shall be connected using a shielded network cable (STP) that is properly grounded.

Contact information

Axis Communications Inc.
300 Apollo Drive
Chelmsford, MA 01824
United States of America
Tel: +1 978 614 2000

Canada

This digital apparatus complies with CAN ICES-3 (Class B). The product shall be connected using a shielded network cable (STP) that is properly grounded. Cet appareil numérique est conforme à la norme CAN NMB-3 (classe B). Le produit doit être connecté à l'aide d'un câble réseau blindé (STP) qui est correctement mis à la terre.

Europe
This digital equipment fulfills the requirements for RF emission according to the Class B limit of EN 55032. The product shall be connected using a shielded network cable (STP) that is properly grounded.

Australia/New Zealand
This digital equipment fulfills the requirements for RF emission according to the Class B limit of AS/NZS CISPR 32. The product shall be connected using a shielded network cable (STP) that is properly grounded.

Japan
この装置は、クラスB機器です。この装置は、住宅環境で使用することを目的としていますが、この装置がラジオやテレビジョン受信機に近接して使用されると、受信障害を引き起こすことがあります。取扱説明書に従って正しい取り扱いをして下さい。VCCI – B
本製品は、シールドネットワークケーブル(STP)を使用して接続してください。また適切に接地してください。

Korea
이 기기는 가정용(B급) 전자파적합기기로서 주로 가정에서 사용하는 것을 목적으로 하며, 모든 지역에서 사용할 수 있습니다. 적절히 접지된 STP (shielded twisted pair) 케이블을 사용하여 제품을 연결 하십시오.

Safety
When used with Power over Ethernet (PoE), the Power Sourcing Equipment (PSE) shall comply with IEEE 802.3af and Limited Power Source (LPS) according to clause 2.5 of IEC/EN/UL 60950-1 or annex Q of IEC/EN/UL 62368-1.

We recommend the use of Axis midspans or Axis PoE switches.

Disposal and recycling
When this product has reached the end of its useful life, dispose of it according to local laws and regulations. For information about your nearest designated collection point, contact your local authority responsible for waste disposal. In accordance with local legislation, penalties may be applicable for incorrect disposal of this waste.

Europe

This symbol means that the product shall not be disposed of together with household or commercial waste. Directive 2012/19/EU on waste electrical and electronic equipment (WEEE) is applicable in the European Union member states. To prevent potential harm to human health and the environment, the product must be disposed of in an approved and environmentally safe recycling process. For information about your nearest designated collection point, contact your local authority responsible for waste disposal. Businesses should contact the product supplier for information about how to dispose of this product correctly.

This product complies with the requirements of Directive 2011/65/EU on the restriction of the use of certain hazardous substances in electrical and electronic equipment (RoHS).

Contact information
Axis Communications AB
Emdalavägen 14
223 69 Lund
Sweden

Tel: +46 46 272 18 00
Fax: +46 46 13 61 30

axis.com

Warranty information
For information about Axis' product warranty and thereto related information, go to *axis.com/warranty*

Support
Should you require any technical assistance, please contact your Axis reseller. If your questions cannot be answered immediately, your reseller will forward your queries through the appropriate channels to ensure a rapid response. If you are connected to the Internet, you can:

- download user documentation and software updates
- find answers to resolved problems in the FAQ database, search by product, category, or phrase
- report problems to Axis support staff by logging in to your private support area
- chat with Axis support staff
- visit Axis Support at *axis.com/support*

Learn more!
Visit Axis learning center *axis.com/academy* for useful trainings, webinars, tutorials and guides.

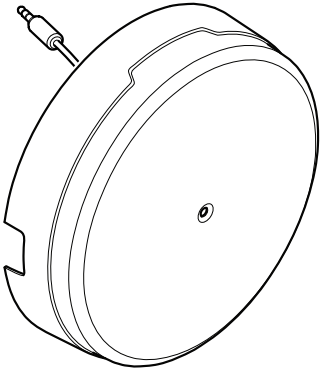

1x

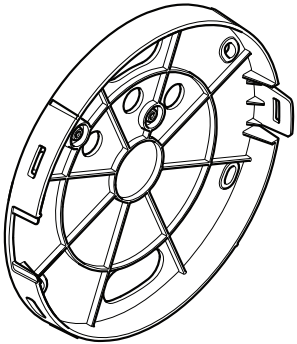

1x

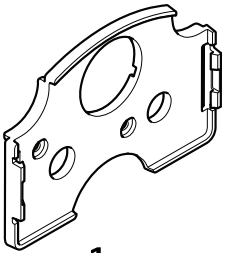

1x

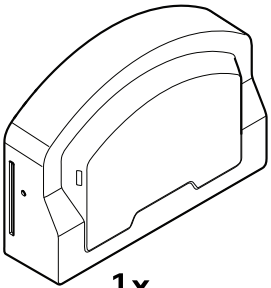

1x

1x

2x

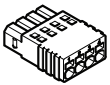

1x

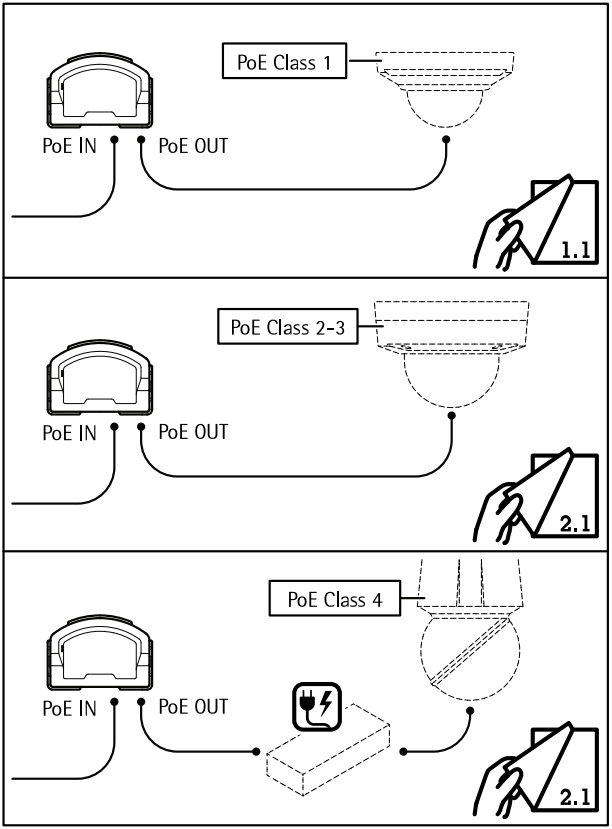
PoE Class 1
PoE IN
PoE OUT
1.1
PoE Class 2-3
PoE IN
PoE OUT
2.1
PoE Class 4
PoE IN
PoE OUT
2.1

1.1

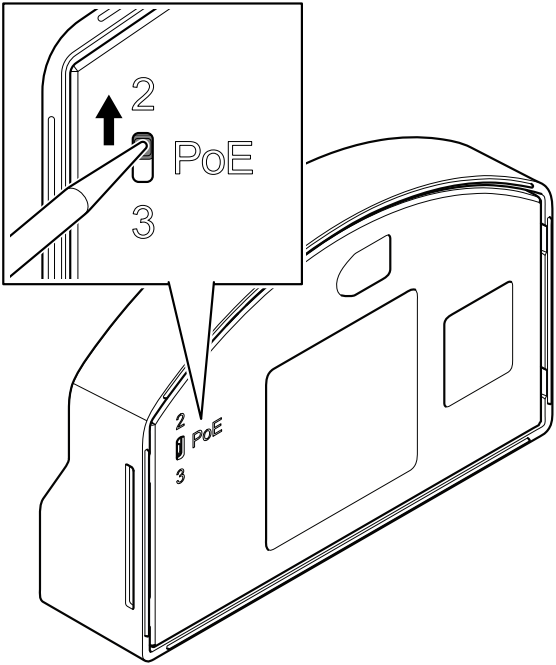

2.1

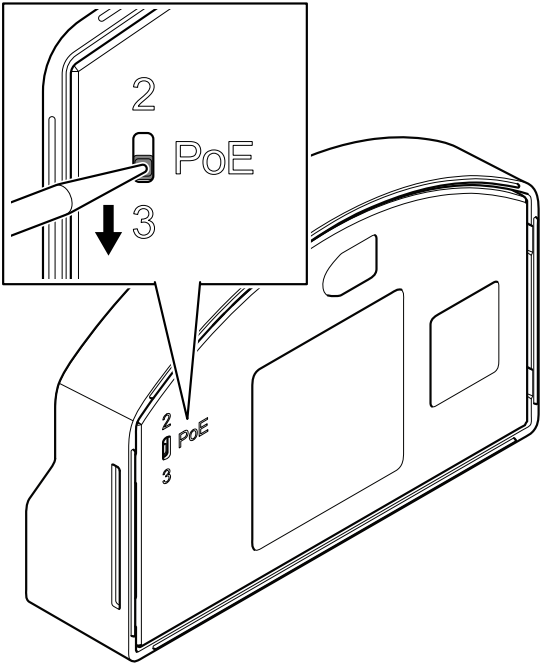

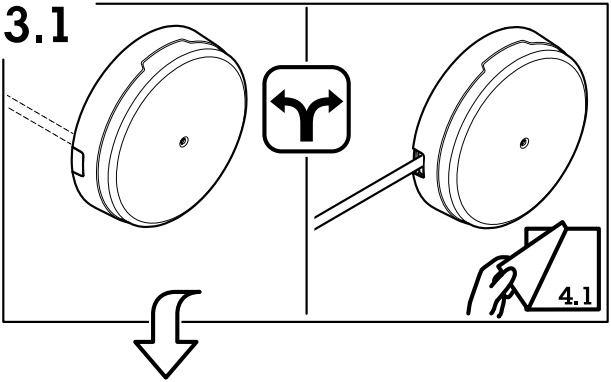
3.1
4.1

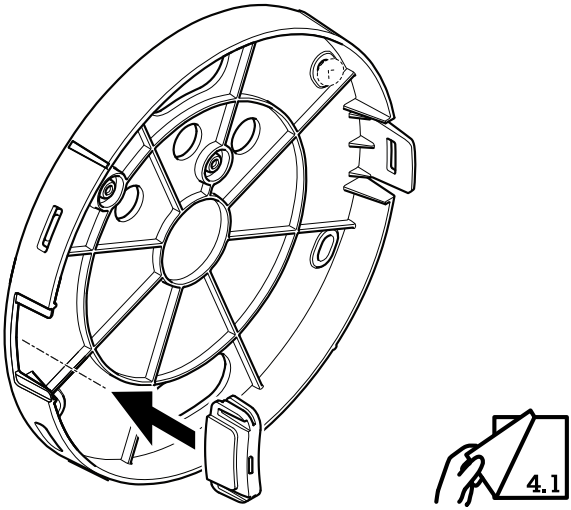
4.1

4.1

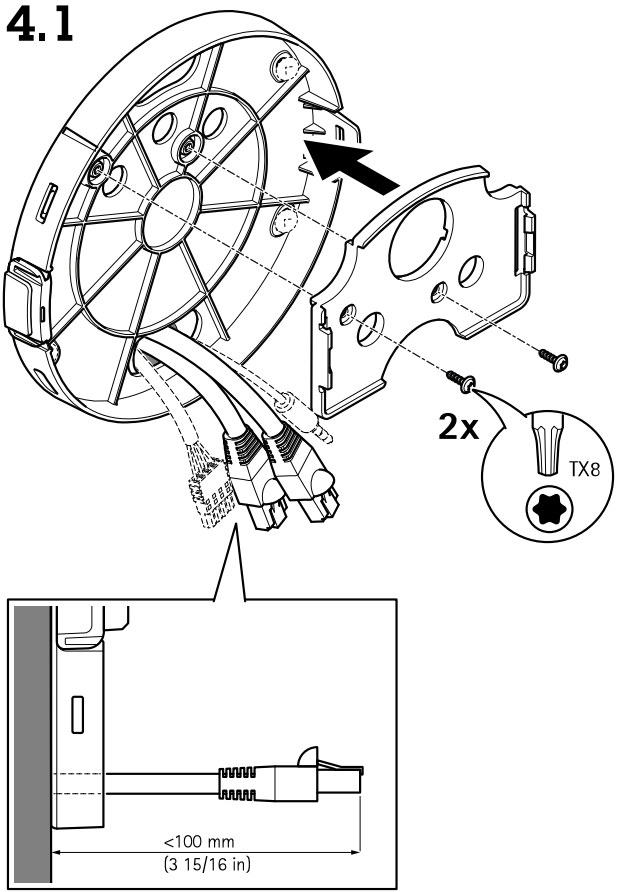

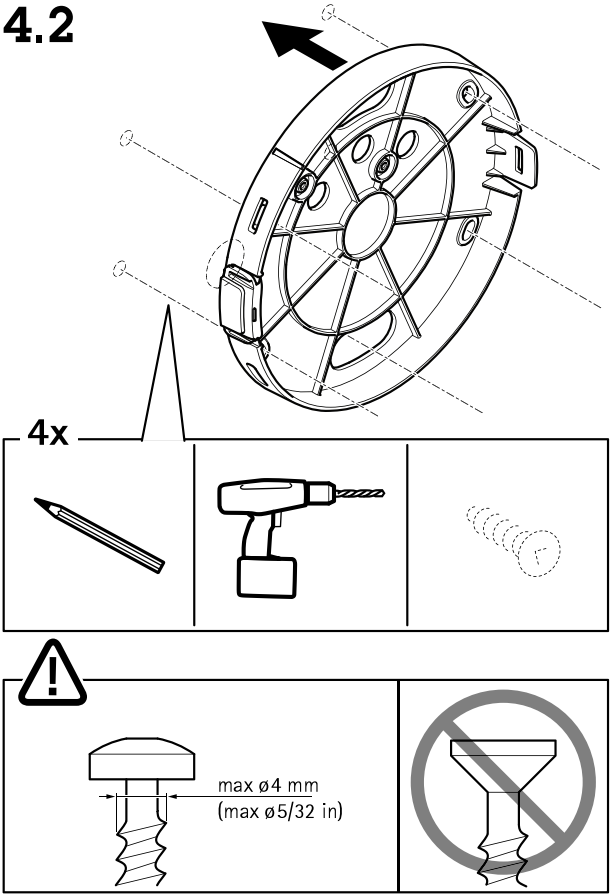
4.2
4x
max ø4 mm
(max ø5/32 in)

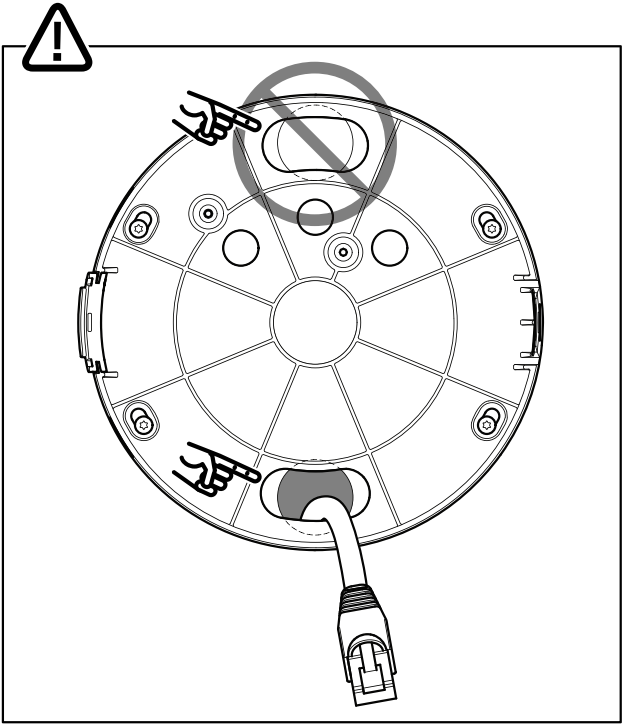

4.3

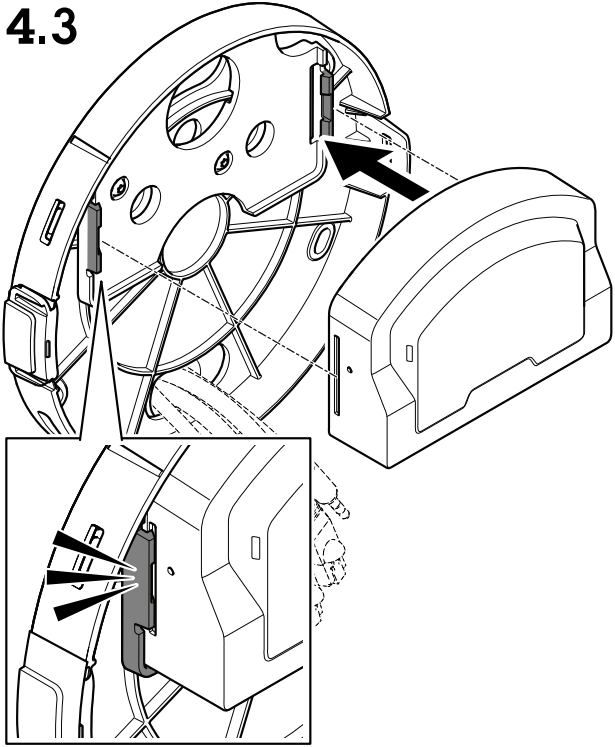

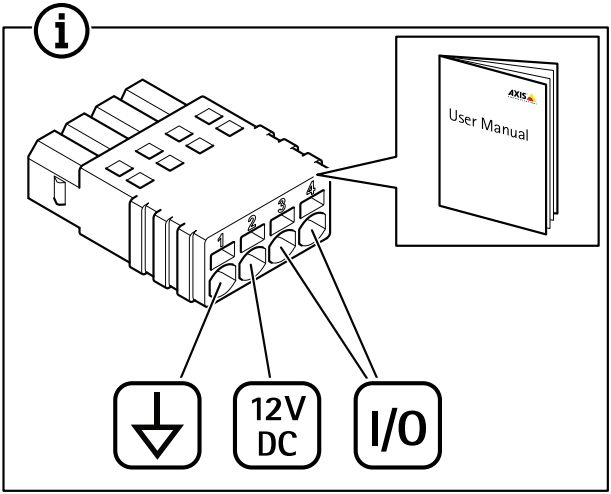

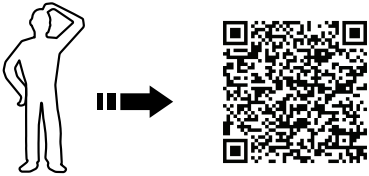

axis.com/product/axis-t6112

4.4

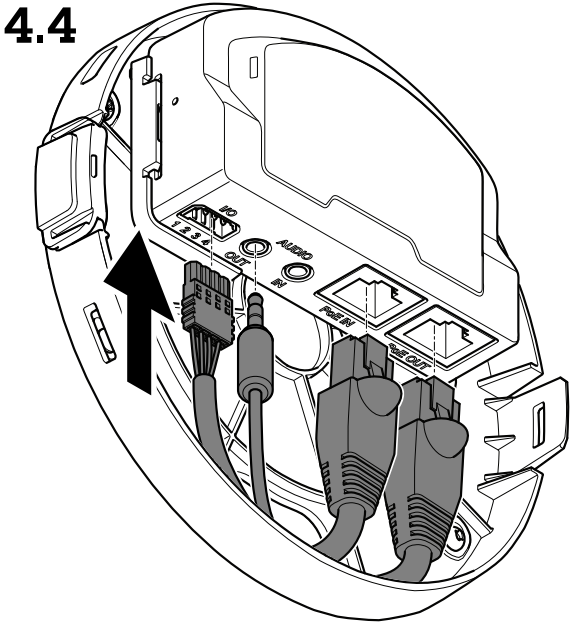

4.5

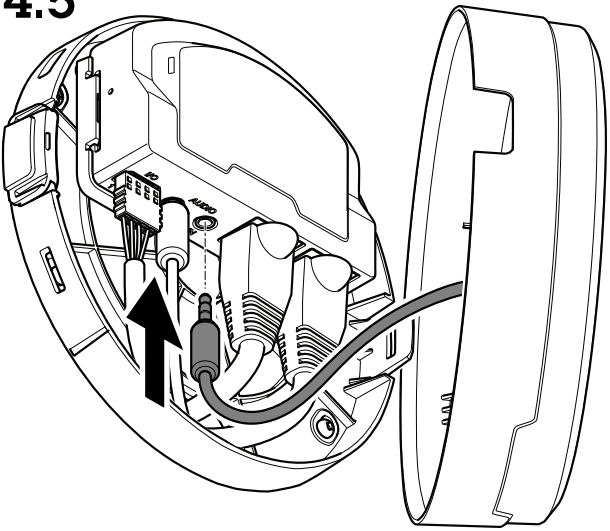

4.6

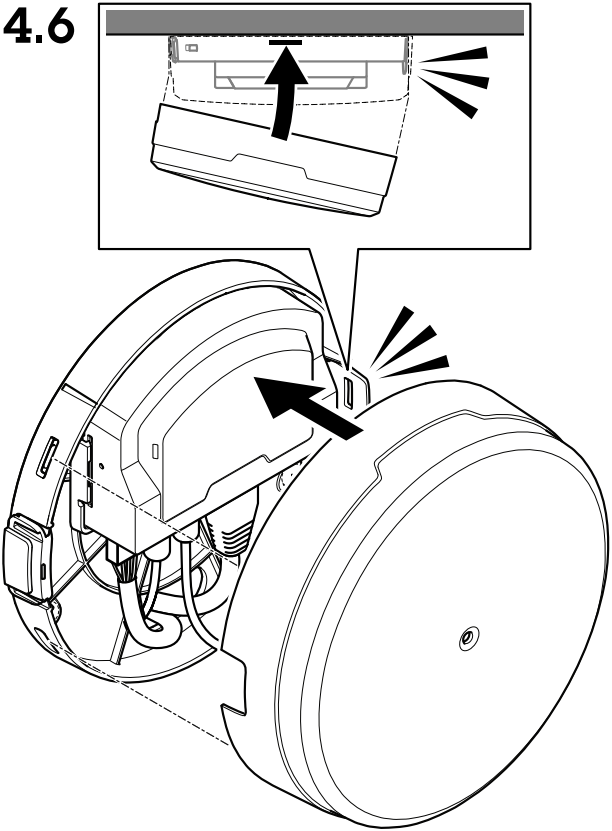

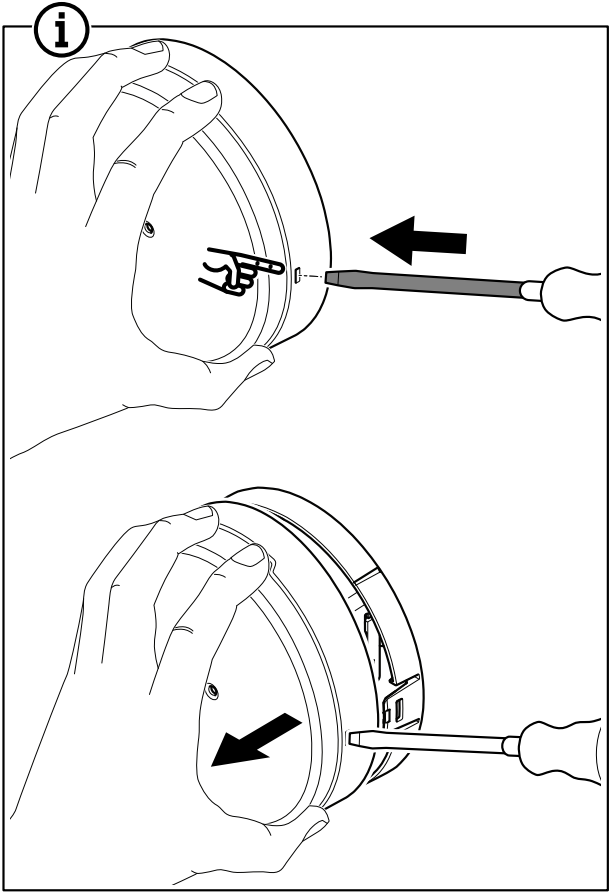

English

Safety instructions

NOTICE

- The Axis product shall be used in compliance with local laws and regulations.
- Axis recommends using a shielded network cable (STP).
- Store the Axis product in a dry and ventilated environment.
- Avoid exposing the Axis product to shocks or heavy pressure.
- Use only applicable tools when installing the Axis product. Using excessive force with power tools could cause damage to the product.
- Do not use chemicals, caustic agents, or aerosol cleaners.
- Use a clean cloth dampened with pure water for cleaning.
- Use only accessories that comply with the technical specification of your product. These can be provided by Axis or a third party. Axis recommends using Axis power source equipment compatible with your product.
- Use only spare parts provided by or recommended by Axis.
- Do not attempt to repair the product yourself. Contact Axis support or your Axis reseller for service matters.

Transportation

NOTICE

- When transporting the Axis product, use the original packaging or equivalent to prevent damage to the product.

Français

Consignes de sécurité

AVIS

- Le produit Axis doit être utilisé conformément aux lois et réglementations locales.
- Axis recommande d'utiliser un câble réseau blindé (STP).
- Conserver ce produit Axis dans un environnement sec et ventilé.
- Ne pas exposer ce produit Axis aux chocs ou aux fortes pressions.
- Utiliser uniquement des outils recommandés pour l'installation de l'appareil Axis. L'application d'une force excessive sur l'appareil avec des outils puissants pourrait l'endommager.
- Ne pas utiliser de produits chimiques, de substances caustiques ou de nettoyants pressurisés.
- Utiliser un chiffon propre imbibé d'eau pure pour le nettoyage.
- Utiliser uniquement des accessoires conformes aux caractéristiques techniques de votre produit. Ils peuvent être fournis par Axis ou un tiers. Axis recommande d'utiliser un équipement d'alimentation Axis compatible avec votre produit.
- Utiliser uniquement les pièces de rechange fournies ou recommandées par Axis.
- Ne pas essayer de réparer vous-même ce produit. Contacter l'assistance technique d'Axis ou votre revendeur Axis pour des problèmes liés à l'entretien.

Transport

AVIS

- Lors du transport du produit Axis, utilisez l'emballage d'origine ou un équivalent pour éviter d'endommager le produit.

Deutsch

Sicherheitsanweisungen

HINWEIS

- Das Axis-Produkt muss unter Beachtung der geltenden Gesetze und Bestimmungen betrieben werden.
- Axis empfiehlt, ein abgeschirmtes Netzwerkkabel (STP) zu verwenden.
- Lagern Sie das Axis Produkt in einer trockenen und belüfteten Umgebung.
- Das Axis-Produkt weder Stößen noch starkem Druck aussetzen.
- Verwenden Sie bei der Installation des Axis Produkts ausschließlich passende Werkzeuge. Ein zu großer Kraftaufwand mit elektrischen Werkzeugen kann das Produkt beschädigen.
- Verwenden Sie keine chemischen, ätzenden oder aerosolhaltigen Reinigungsmittel.
- Verwenden Sie zum Reinigen ein sauberes, mit destilliertem Wasser angefeuchtetes Tuch.
- Verwenden Sie nur Zubehör, das den technischen Vorgaben Ihres Produkts entspricht. Dieses ist von Axis oder Drittanbietern erhältlich. Axis empfiehlt die mit Ihrem Produkt kompatible Stromversorgung von Axis.
- Verwenden Sie ausschließlich Ersatzteile die von Axis angeboten oder empfohlen werden.
- Versuchen Sie nicht, dieses Produkt selbsttätig zu reparieren. Wenden Sie sich bezüglich Reparatur und Wartung an den Axis Support oder Ihren Axis Händler.

Transport

HINWEIS

- Bei Bedarf transportieren Sie das Axis Produkt in der Originalverpackung oder einer entsprechenden Verpackung, so dass Schäden vermieden werden.

Italiano

Informazioni di sicurezza

AVVISO

- Il dispositivo Axis deve essere utilizzato in conformità alle leggi e alle normative locali.
- Axis consiglia l'uso di un cavo di rete schermato (STP).
- Conservare il dispositivo Axis in un ambiente asciutto e ventilato.
- Evitare di esporre il dispositivo Axis a urti o pressioni eccessive.
- Utilizzare solo strumenti applicabili quando si installa il dispositivo Axis. Se si utilizza una forza eccessiva con strumenti non adatti è possibile causare danni al dispositivo.
- Non utilizzare sostanze chimiche, agenti caustici o detergenti aerosol.
- Utilizzare un panno pulito inumidito in acqua pura per la pulizia.
- Utilizzare solo accessori compatibili con le specifiche tecniche del dispositivo. Questi possono essere forniti da Axis o da terze parti. Axis consiglia l'uso dell'apparecchiatura di alimentazione Axis compatibile con il dispositivo.
- Utilizzare solo parti di ricambio fornite o consigliate da Axis.
- Non tentare di riparare il dispositivo da soli. Contattare l'assistenza o il rivenditore Axis per questioni relative alla manutenzione.

Trasporto

AVVISO

- Durante il trasporto del dispositivo Axis, utilizzare l'imballaggio originale o equivalente per evitare danni al dispositivo.

Español

Instrucciones de seguridad

AVISO

- Este producto de Axis debe utilizarse de conformidad con las leyes y normativas locales.
- Axis recomienda utilizar un cable de red blindado (STP).
- Almacene el producto de Axis en un entorno seco y ventilado.
- Evite la exposición del producto de Axis a choques o a una fuerte presión.
- Utilice solo las herramientas correspondientes cuando instale el producto de Axis. La aplicación de una fuerza excesiva con herramientas eléctricas puede provocar daños en el producto.
- No utilice limpiadores en aerosol, agentes cáusticos ni productos químicos.
- Limpie con un paño limpio humedecido con agua pura.
- Utilice solo accesorios que cumplan con las especificaciones técnicas de su producto. Estos accesorios los puede proporcionar Axis o un tercero. Axis recomienda utilizar un equipo de suministro de alimentación de Axis compatible con su producto.
- Utilice solo piezas de repuesto proporcionadas o recomendadas por Axis.
- No intente reparar el producto usted mismo. Póngase en contacto con el servicio de asistencia técnica de Axis o con su distribuidor de Axis para tratar asuntos de reparación.

Transporte

AVISO

- Cuando transporte el producto de Axis, utilice el embalaje original o un equivalente para evitar daños en el producto.

日本語

安全手順

注記

- 本製品は、お使いになる地域の法律や規制に準拠して使用してください。
- Axisは、シールドネットワークケーブル(STP) の使用を推奨します。
- 本製品は乾燥した換気のよい環境に保管してください。
- 本製品に衝撃または強い圧力を加えないでください。
- 本製品を設置する際には、適切な工具のみを使用してください。 電動工具を使用して過剰な力をかけると、製品が損傷することがあります。
- 化学薬品、腐食剤、噴霧式クリーナーは使用しないでください。
- 清掃には、きれいな水に浸した清潔な布を使用してください。
- 製品の技術仕様に準拠したアクセサリーのみを使用してください。 これらのアクセサリーは、Axisまたはサードパーティから入手できます。 Axisは、ご使用の製品

と互換性のあるAxis給電ネットワークスイッチの使用を推奨します。
- Axisが提供または推奨する交換部品のみを使用してください。
- 製品を自分で修理しないでください。 修理については、Axisサポートまたは販売代理店にお問い合わせください。

輸送

注記

- 本製品を運搬する際は、製品が損傷しないよう、元の梱包か同等の梱包を使用してください。

Português

Instruções de segurança

AVISO

- O produto Axis deve ser usado em conformidade com as leis e regulamentações locais.
- A Axis recomenda usar um cabo de rede blindado (STP).
- Armazene o produto Axis em um ambiente seco e ventilado.
- Evite expor o produto Axis a impactos ou pressão elevada.
- Use apenas as ferramentas recomendadas ao instalar o produto Axis. O uso de força excessiva com ferramentas elétricas poderia danificar o produto.
- Não use produtos químicos, agentes cáusticos ou limpadores aerossóis.
- Use um pano limpo úmido para limpar o produto.
- Utilize apenas acessórios que atendam às especificações técnicas do produto. Esses poderão ser fornecidos pela Axis ou por terceiros. A Axis recomenda usar equipamento de fonte de alimentação Axis compatível com seu produto.
- Utilize apenas peças sobressalentes fornecidas ou recomendadas pela Axis.
- Não tente reparar o produto por conta própria. Entre em contato com o suporte ou seu revendedor Axis para quaisquer questões relacionadas a serviços.

Transporte

AVISO

- Ao transportar o produto Axis, use a embalagem original ou equivalente para evitar danos ao produto.

РУССКИЙ

Правила безопасности

УВЕДОМЛЕНИЕ

- Устройство Axis должно использоваться в соответствии с местными законами и правилами.
- Компания Axis рекомендует использовать экранированный сетевой кабель (STP).
- Устройство Axis должно храниться в сухом, хорошо проветриваемом помещении.
- Не допускайте ударов или приложения высокого давления к устройству Axis.
- При установке устройства Axis используйте только предназначенные для этого инструменты. Приложение чрезмерных усилий к инструментам может привести к повреждению устройства.
- Не используйте химикалии, едкие вещества или аэрозольные очистители.
- Для очистки используйте чистую ткань, смоченную чистой водой.
- Используйте только принадлежности, которые соответствуют техническим характеристикам данного устройства. Они могут поставляться компанией Axis или сторонним производителем. Компания Axis рекомендует использовать блоки питания Axis, совместимые с устройством.
- Используйте только запасные части, поставляемые или рекомендованные компанией Axis.
- Не пытайтесь отремонтировать устройство самостоятельно. По вопросам обслуживания обращайтесь в службу поддержки Axis или к своему реселлеру Axis.

Транспортировка

УВЕДОМЛЕНИЕ

- При транспортировке устройства Axis используйте оригинальную упаковку или ее эквивалент во избежание повреждения изделия.

中文

安全说明

注意

- 使用安讯士产品时应遵守当地法律和法规。
- 安讯士推荐使用屏蔽网络电缆 (STP)。
- 在干燥通风的环境中存放安讯士产品。
- 避免将安讯士产品暴露在冲击或高压环境下。
- 安装安讯士产品时，仅使用适用的工具。使用电动工具过度施力可能导致产品损坏。
- 请勿使用化学品、腐蚀剂或气雾剂。
- 使用蘸纯净水的干净布进行清洁。

- 仅使用符合产品技术规格的附件。 这些附件可由安讯士或第三方提供。 安讯士推荐使用与产品兼容的安讯士电源设备。
- 仅使用安讯士提供或推荐的备件。
- 请勿尝试自行维修产品。 有关服务事项，请联系安讯士支持部门或安讯士经销商。

运输

注意

- 安讯士产品运输途中，应使用其原包装或等效包装，以防对产品造成损坏。

한국어

안전 지침

주의 사항

- Axis 제품은 해당 지역 법률 및 규정을 준수하여 사용해야 합니다.
- Axis는 차폐 네트워크 케이블(STP) 사용을 권합니다.
- Axis 제품은 건조하고 환기가 잘 되는 곳에 보관하십시오.
- Axis 제품에 충격이나 강한 압력을 가하지 마십시오.
- Axis 제품을 설치할 경우 해당 도구만 사용하십시오. 전동 공구로 과도한 힘을 사용하면 제품에 손상을 줄 수 있습니다.
- 화학 물질, 부식제, 에어로졸 세척제를 사용하지 마십시오.
- 깨끗한 물에 적신 깨끗한 천을 사용하여 닦으십시오.
- 제품의 기술적 사양을 준수하는 액세서리만 사용하십시오. 이러한 액세서리는 Axis 또는 제3자가 제공할 수 있습니다. Axis는 귀하의 제품과 호환되는 Axis 전원 장비 사용을 권합니다.
- Axis가 공급하거나 추천하는 예비 부품만 사용하십시오.
- 제품을 직접 수리하려고 하지 마십시오. 서비스 문제에 대해 Axis 지원 부서 또는 Axis 리셀러에 문의하십시오.

운반

주의 사항

- Axis 제품을 운반할 때는 원래 포장이나 이에 준하는 포장을 사용해 제품이 손상되지 않도록 하십시오.

Installation Guide
AXIS T6112 Audio and I/O interface
© Axis Communications AB, 2018 - 2019
Ver. M3.3
Date: April 2019
Part No. 1990119