AXIS P3827-PVE Panoramic Camera

True to life, 180° coverage, no blind spots

With 7 MP resolution and seamless stitching of all four images, this multisensor camera offers complete coverage and excellent image quality with incredible details up to 30 fps. It delivers 180° horizontal and 90° vertical coverage with no blind spots. Plus, it's possible to mount two cameras back-to-back for a complete 360° overview. Including horizon straightening, this product will give an excellent viewing experience, enabling to set the horizon in the image. Built on ARTPEC-8, this cost-effective camera supports advanced analytics based on deep learning on the edge. Additionally, built-in cybersecurity features prevent unauthorized access and safeguard your system.

- > 7 MP multisensor camera with one IP address
- > 180° horizontal, 90° vertical coverage
- > Seamlessly stitched realistic images
- > Support for advanced analytics
- > Horizon straightening

AXIS P3827-PVE Panoramic Camera

Camera

Image sensor	4 x 1/2.8" progressive scan RGB CMOS Pixel size 2.9 µm
Lens	Fixed 3.3 mm, F2.0 Horizontal field of view: 180° Vertical field of view: 90°
Day and night	Automatic IR-cut filter Hybrid IR filter
Minimum illumination	**Color:** 0.15 lux at 50 IRE, F2.0 **B/W:** 0.05 lux at 50 IRE, F2.0
Shutter speed	1/31500 s to 1.5 s
Camera angle adjustment	Pan ±180° Tilt 0° to 50° Roll ±5°

System on chip (SoC)

Model	ARTPEC-8
Memory	2048 MB RAM, 8192 MB Flash
Compute capabilities	Deep learning processing unit (DLPU)

Video

Video compression	H.264 (MPEG-4 Part 10/AVC) Baseline, Main and High Profiles H.265 (MPEG-H Part 2/HEVC) Main Profile Motion JPEG
Resolution	3712x1856 to 640x320
Frame rate	Up to 25/30 fps (50/60 Hz) in all resolutions
Video streaming	Up to 20 unique and configurable video streams[a] Axis Zipstream technology in H.264 and H.265 Controllable frame rate and bandwidth VBR/ABR/MBR H.264/H.265 Low latency mode Video streaming indicator
Signal-to-noise ratio	>55 dB
WDR	Forensic WDR: Up to 120 dB depending on scene
Multi-view streaming	Up to 8 individually cropped out view areas
Noise reduction	Spatial filter (2D noise reduction) Temporal filter (3D noise reduction)
Image settings	Horizon straightening, saturation, contrast, brightness, sharpness, white balance, day/night threshold, local contrast, tone mapping, exposure mode, compression, dynamic text and image overlay, polygon privacy masks
Image processing	Axis Zipstream, Forensic WDR, Lightfinder
Pan/Tilt/Zoom	Digital PTZ

Audio

Audio features	AGC automatic gain control Network speaker pairing
Audio streaming	Configurable duplex: One-way (simplex, half duplex) Two-way (half duplex, full duplex)
Audio input	Input for external unbalanced microphone, optional 5 V microphone power Digital input, optional 12 V ring power Unbalanced line input
Audio output	Output via network speaker pairing
Audio encoding	24bit LPCM, AAC-LC 8/16/32/48 kHz, G.711 PCM 8 kHz, G.726 ADPCM 8 kHz, Opus 8/16/48 kHz Configurable bit rate

Network

Network protocols	IPv4, IPv6 USGv6, ICMPv4/ICMPv6, HTTP, HTTPS[b], HTTP/2, TLS[b], QoS Layer 3 DiffServ, FTP, SFTP, CIFS/SMB, SMTP, mDNS (Bonjour), UPnP®, SNMP v1/v2c/v3 (MIB-II), DNS/DNSv6, DDNS, NTP, NTS, RTSP, RTP, SRTP, TCP, UDP, IGMPv1/v2/v3, RTCP, ICMP, DHCPv4/v6, ARP, SSH, LLDP, CDP, MQTT v3.1.1, Secure syslog (RFC 3164/5424, UDP/TCP/TLS), Link-Local address (ZeroConf), IEEE 802.1X (EAP-TLS), IEEE 802.1AR

System integration

Application Programming Interface	Open API for software integration, including VAPIX®, metadata and AXIS Camera Application Platform (ACAP); specifications at *axis.com/developer-community*. One-click cloud connection ONVIF® Profile G, ONVIF® Profile M, ONVIF® Profile S, and ONVIF® Profile T, specifications at *onvif.org*
Video management systems	Compatible with AXIS Companion, AXIS Camera Station, video management software from Axis' Application Development Partners available at *axis.com/vms*
Onscreen controls	Privacy masks Media clip
Event conditions	Device status: above operating temperature, above or below operating temperature, below operating temperature, within operating temperature, IP address removed, new IP address, network lost, system ready, ring power overcurrent protection, live stream active, casing open Digital audio input status Edge storage: recording ongoing, storage disruption, storage health issues detected I/O: digital input, manual trigger, virtual input MQTT: subscribe Scheduled and recurring: schedule Video: average bitrate degradation, day-night mode, live stream, tampering
Event actions	Audio clips: play, stop Day-night mode I/O: toggle I/O once, toggle I/O while the rule is active MQTT: publish Notification: HTTP, HTTPS, TCP and email Overlay text Recordings: SD card and network share SNMP traps: send, send while the rule is active Upload of images or video clips: FTP, SFTP, HTTP, HTTPS, network share and email
Built-in installation aids	Pixel counter, level grid

Analytics

Applications	**Included** AXIS Object Analytics, Scene metadata, AXIS Video Motion Detection, active tampering alarm, audio detection Support for AXIS Camera Application Platform enabling installation of third-party applications, see *axis.com/acap*
AXIS Object Analytics	**Object classes**: humans, vehicles (types: cars, buses, trucks, bikes, other) **Scenarios**: line crossing, object in area, time in area, crossline counting, occupancy in area Up to 10 scenarios **Other features**: triggered objects visualized with trajectories, color-coded bounding boxes and tables Polygon include/exclude areas Perspective configuration ONVIF Motion Alarm event
Scene metadata	**Object classes**: humans, faces, vehicles (types: cars, buses, trucks, bikes), license plates **Object attributes**: vehicle color, upper/lower clothing color, confidence, position

Approvals

Product markings	CSA, UL/cUL, BIS,UKCA, CE, KC, EAC, VCCI, RCM
Supply chain	TAA compliant
EMC	CISPR 35, CISPR 32 Class A, EN 55035, EN 55032 Class A, EN 50121-4, EN 61000-6-1, EN 61000-6-2, IEC 62236-4 **Australia/New Zealand:** RCM AS/NZS CISPR 32 Class A **Canada:** ICES-3(A)/NMB-3(A) **Japan:** VCCI Class A **Korea:** KS C 9835, KS C 9832 Class A **USA:** FCC Part 15 Subpart B Class A
Safety	CAN/CSA C22.2 No. 62368-1 ed. 3, IEC/EN/UL 62368-1 ed. 3, IS 13252
Environment	IEC 60068-2-1, IEC 60068-2-2, IEC 60068-2-6, IEC 60068-2-14, IEC 60068-2-27, IEC 60068-2-78, IEC/EN 60529 IP66/IP67,

	IEC/EN 62262 IK10, NEMA 250 Type 4X, NEMA TS 2 (2.2.7-2.2.9), MIL-STD-810H (Method 501.7, 502.7, 505.7, 506.6, 507.6, 509.7, 512.6)
Network	NIST SP500-267
Cybersecurity	ETSI EN 303 645, FIPS 140

Cybersecurity

Edge security	**Software:** Signed firmware, brute force delay protection, digest authentication and OAuth 2.0 RFC6749 OpenID Authorization Code Flow for centralized ADFS account management, password protection, AES-XTS-Plain64 256bit SD card encryption **Hardware:** Secure boot, Axis Edge Vault with Axis device ID, signed video, secure keystore (CC EAL4+, FIPS 140-2 level 2 certified hardware protection of cryptographic operations and keys)
Network security	IEEE 802.1X (EAP-TLS, PEAP-MSCHAPv2)[b], IEEE 802.1AE (MACsec PSK/EAP-TLS), IEEE 802.1AR, HTTPS/HSTS[b], TLS v1.2/v1.3[b], Network Time Security (NTS), X.509 Certificate PKI, host-based firewall
Documentation	*AXIS OS Hardening Guide* *Axis Vulnerability Management Policy* *Axis Security Development Model* AXIS OS Software Bill of Material (SBOM) To download documents, go to *axis.com/support/cybersecurity/resources* To read more about Axis cybersecurity support, go to *axis.com/cybersecurity*

General

Casing	IP66/IP67-, NEMA 4X- and IK10-rated aluminum casing Polycarbonate hard-coated dome Color: white NCS S 1002-B For repainting instructions, go to the product's support page. For information about the impact on warranty, go to *axis.com/warranty-implication-when-repainting*.
Mounting	Mounting bracket with junction box holes (double-gang, single-gang, 4" square, and 4" octagon) and for wall or ceiling mount ¾" (M25) conduit side entries
Power	Power over Ethernet (PoE) IEEE 802.3at Type 2 Class 4 Typical 12 W, max 18 W
Connectors	Network: Shielded RJ45 10BASE-T/100BASE-TX/1000BASE-T PoE I/O: Terminal block for two configurable supervised inputs / digital outputs (12 V DC output, max load 50 mA) Audio: 3.5 mm analog/digital mic/line in
Storage	Support for microSD/microSDHC/microSDXC card Recording to network-attached storage (NAS) For SD card and NAS recommendations see *axis.com*
Operating conditions	-40 °C to 55 °C (-40 °F to 131 °F) Maximum temperature according to NEMA TS 2 (2.2.7): 74 °C (165 °F) Start-up temperature: -40 °C Humidity 10–100% RH (condensing)
Storage conditions	-40 °C to 65 °C (-40 °F to 149 °F) Humidity 5–95% RH (non-condensing)
Dimensions	Height: 169 mm(6.7 in) ø 195 mm (7.7 in) Effective Projected Area (EPA): 0.025 m^2 (0.27 ft^2)
Weight	2300 g (5.1 lb)
Box content	Camera, installation guide, terminal block connector, connector guard, cable gaskets, owner authentication key
Optional accessories	AXIS T8415 Wireless Installation Tool AXIS Surveillance Cards AXIS TQ3102 Pendant Kit AXIS TQ3101-E Pendant Kit AXIS TQ3201-E Recessed Mount AXIS T94V01C Dual Camera Mount For more accessories, go to *axis.com/products/axis-p3827-pve#accessories*
System tools	AXIS Site Designer, AXIS Device Manager, product selector, accessory selector, lens calculator Available at *axis.com*
Languages	English, German, French, Spanish, Italian, Russian, Simplified Chinese, Japanese, Korean, Portuguese, Polish, Traditional Chinese
Warranty	5-year warranty, see *axis.com/warranty*
Part numbers	Available at *axis.com/products/axis-p3827-pve#part-numbers*

Sustainability

Substance control	PVC free, BFR/CFR free in accordance with JEDEC/ECA Standard JS709 RoHS in accordance with EU RoHS Directive 2011/65/EU/ and EN 63000:2018 REACH in accordance with (EC) No 1907/2006. For SCIP UUID, see *axis.com/partner.*
Materials	Renewable carbon-based plastic content: 19% (biobased) Screened for conflict minerals in accordance with OECD guidelines To read more about sustainability at Axis, go to *axis.com/about-axis/sustainability*
Environmental responsibility	*axis.com/environmental-responsibility* Axis Communications is a signatory of the UN Global Compact, read more at *unglobalcompact.org*

a. *We recommend a maximum of 3 unique video streams for optimized user experience, network bandwidth, and storage utilization. A unique video stream can be served to many video clients in the network using multicast or unicast transport method via built-in stream reuse functionality.*

b. *This product includes software developed by the OpenSSL Project for use in the OpenSSL Toolkit. (openssl.org), and cryptographic software written by Eric Young (eay@cryptsoft.com).*

Dimension drawing

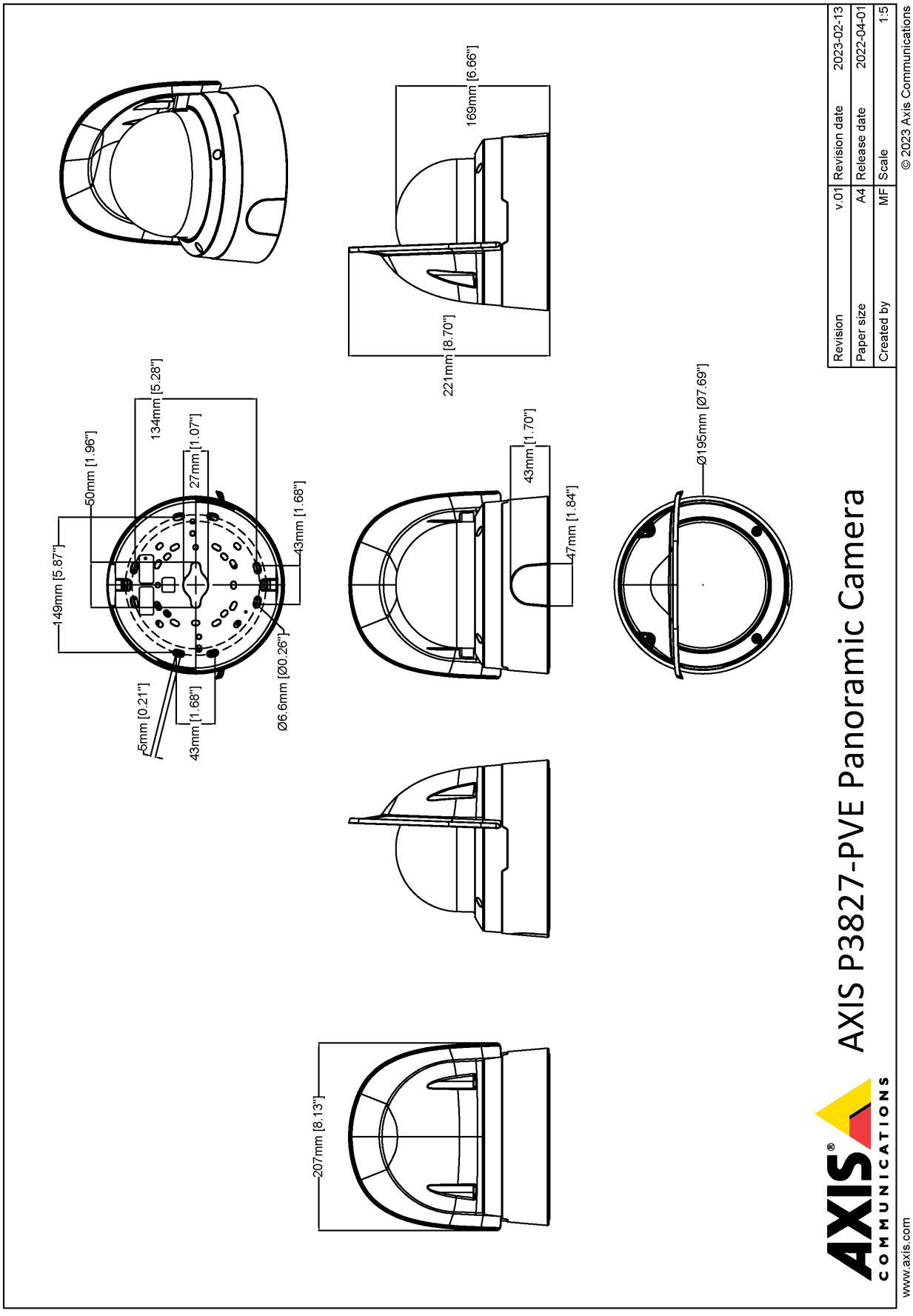

Highlighted capabilities

AXIS Object Analytics

AXIS Object Analytics is a preinstalled, multifeatured video analytics that detects and classifies humans, vehicles, and types of vehicles. Thanks to AI-based algorithms and behavioral conditions, it analyzes the scene and their spatial behavior within – all tailored to your specific needs. Scalable and edge-based, it requires minimum effort to set up and supports various scenarios running simultaneously.

Zipstream

The Axis Zipstream technology preserves all the important forensic in the video stream while lowering bandwidth and storage requirements by an average of 50%. Zipstream also includes three intelligent algorithms, which ensure that relevant forensic information is identified, recorded, and sent in full resolution and frame rate.

Forensic WDR

Axis cameras with wide dynamic range (WDR) technology make the difference between seeing important forensic details clearly and seeing nothing but a blur in challenging light conditions. The difference between the darkest and the brightest spots can spell trouble for image usability and clarity. Forensic WDR effectively reduces visible noise and artifacts to deliver video tuned for maximal forensic usability.

Horizon straightening

Horizon straightening is a feature in panoramic multisensor cameras that compensates for any physical tilt of the camera, thereby removing distortion and enabling the horizon to be straight even though it is not in the middle of the image. All objects and lines that are vertical in real life stay vertical also in the image.

Axis Edge Vault

Axis Edge Vault is the hardware-based cybersecurity platform that safeguards the Axis device. It forms the foundation that all secure operations depend on and offers features to protect the device's identity, safeguard its integrity from factory and protect sensitive information from unauthorized access.

Establishing the root of trust starts at the device's boot process. In Axis devices, the hardware-based mechanism **secure boot** verifies the operating system (AXIS OS) that the device is booting from. AXIS OS, in turn, is cryptographically signed (**signed firmware**) during the build process. Secure boot and signed firmware tie into each other and ensure that the firmware has not been tampered with during the lifecycle of the device and that the device only boots from authorized firmware. This creates an unbroken chain of cryptographically validated software for the chain of trust that all secure operations depend on.

From a security aspect, the **secure keystore** is the critical building-block for protecting cryptographic information used for secure communication (IEEE 802.1X, HTTPS, Axis device ID, access control keys etc..) against malicious extraction in the event of a security breach. The secure keystore is provided through a Common Criteria and/or FIPS 140 certified hardware-based cryptographic computing module. Depending on security requirements, an Axis device can have either one or multiple such modules, like a TPM 2.0 (Trusted Platform Module) or a secure element, and/or a system-on-chip (SoC) embedded Trusted Execution Environment (TEE).

Signed video ensures that video evidence can be verified as untampered without proving the chain of custody of the video file. Each camera uses its unique video signing key, which is securely stored in the secure keystore, to add a signature into the video stream. This allows video to be traced back to the Axis camera from where it originated, so it's possible to verify that the footage has not been tampered with after it left the camera.

To read more about Axis Edge Vault, go to *axis.com/solutions/edge-vault*.

For more information, see *axis.com/glossary*

©2023 - 2024 Axis Communications AB. AXIS COMMUNICATIONS, AXIS, ARTPEC and VAPIX are registered trademarks of Axis AB in various jurisdictions. All other trademarks are the property of their respective owners. We reserve the right to introduce modifications without notice.