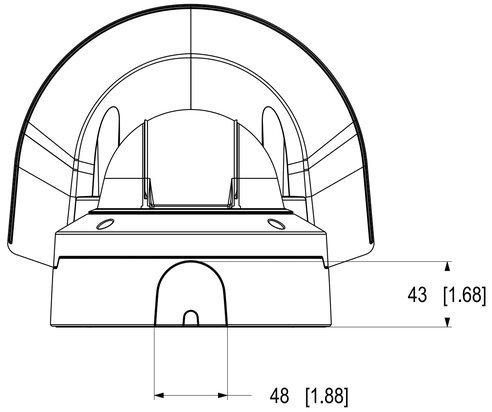

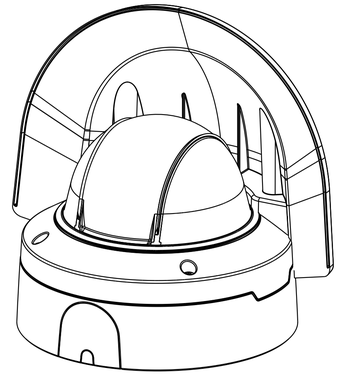

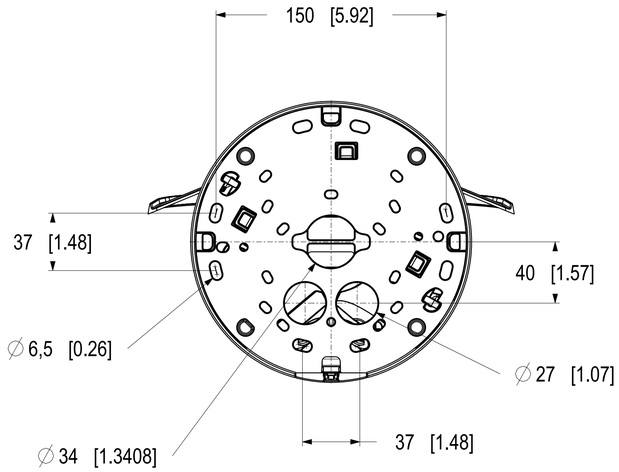

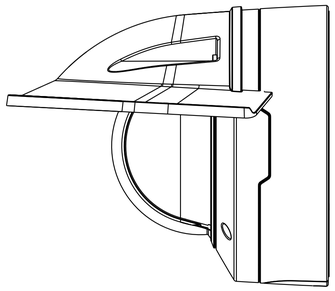

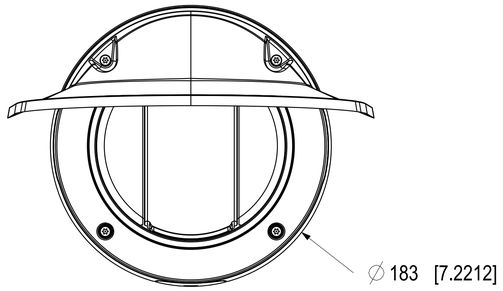

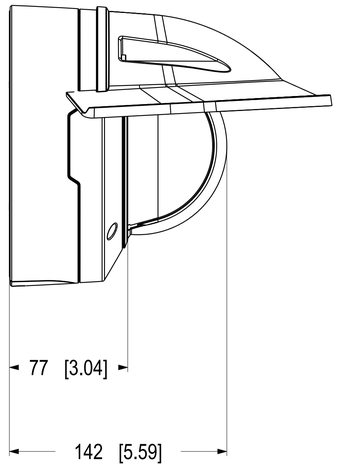

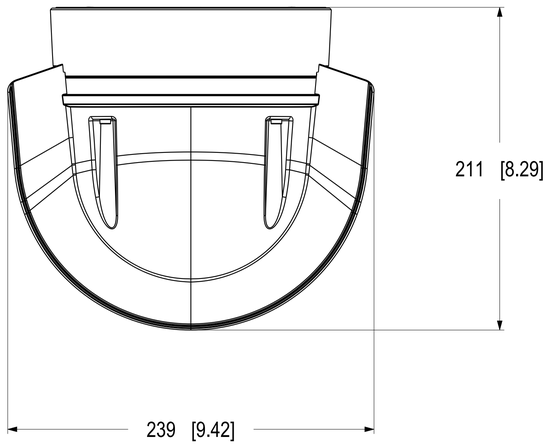

AXIS COMMUNICATIONS

© 2024 Axis Communications AB. All rights reserved.

AXIS Q3556-LVE Dome Camera 10mm

Dimensions in mm [inch]

Date	Version	Scale
2024 Oct-22	M1.2	1:2
Drawing Number	Size	Sheet
3177239	A1	1(1)